Low

Millimetres 100 10 0

DO NOT SCALE

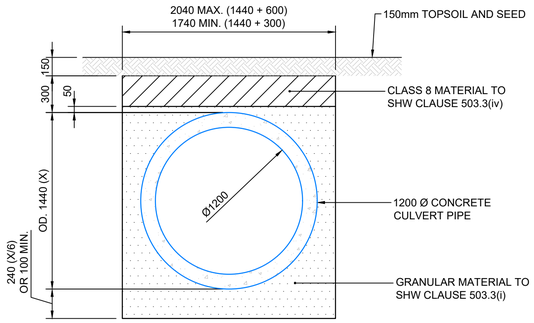

TYPE 'S' PIPE BEDDING DETAIL SOFT LANDSCAPED AREAS

(TO HCD DETAILS)

1:25

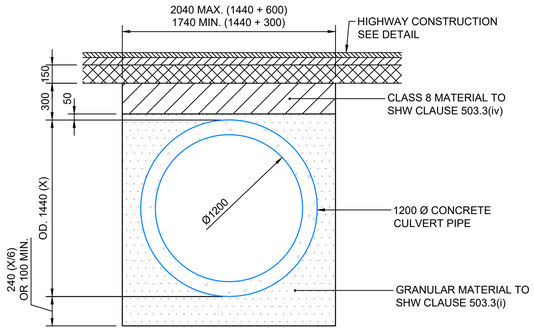

TYPE 'S' PIPE BEDDING DETAIL HIGHWAY CONSTRUCTION AREAS

(TO HCD DETAILS)

1:25

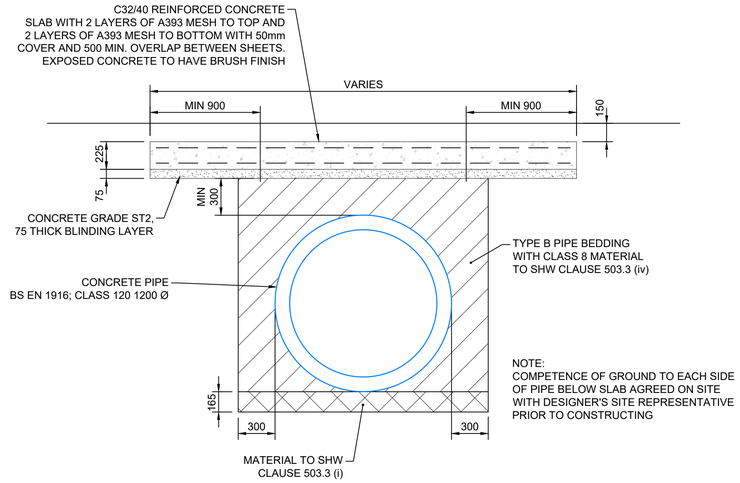

TYPICAL CONCRETE SURFACING REINSTATEMENT DETAIL

SCALE 1:25

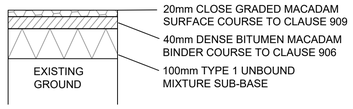

FOOTWAY CONSTRUCTION

SCALE 1:10

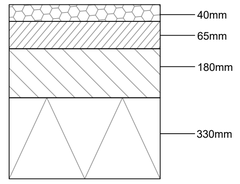

KEY

SURFACE COURSE

CLOSE GRADED ASPHALT CONCRETE SURFACE COURSE CLAUSE 912

BINDER COURSE

ASPHALT CONCRETE BINDER COURSE CLAUSE 906

DENSE BASE

ASPHALT CONCRETE DENSE BASE CLAUSE 906

SUB-BASE

GRANULAR SUB-BASE TYPE 1 MATERIAL CLAUSE 803

CARRIAGEWAY CONSTRUCTION

SCALE 1:10

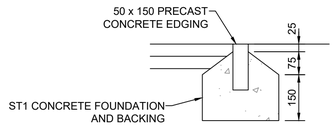

TYPICAL EDGING KERB DETAIL

SCALE 1:10

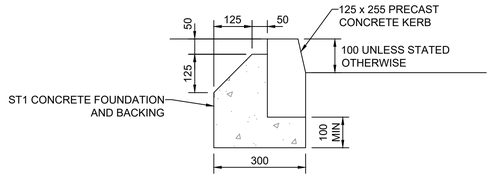

TYPICAL KERB DETAIL

SCALE 1:10

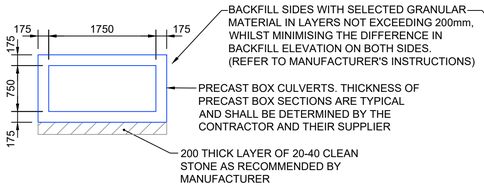

TYPICAL CULVERT DETAIL

1:50

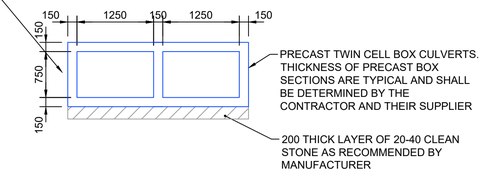

TYPICAL TWIN CELL CULVERT DETAIL

1:50

SAFETY, HEALTH AND ENVIRONMENTAL INFORMATION

In addition to the hazards/risks normally associated with the types of work detailed on this drawing, note the following significant residual risks (Reference shall also be made to the design hazard log).

Construction

- Requirement for services diversions in advance of works to install new culvert
- Potential for encountering unplotted services or private underground services
- access to be maintained to residential and commercial properties
- Presence of asbestos containing materials at Carreg Hir
- Presence of contaminated soils in areas of former industrial use (land at Penrhiwtin)
- Maintaining of existing surface water flows
- Sudden increase in flows

Maintenance / Cleaning

- Trash screen will require regular inspection and clearance
- Trash screen and outfall to be inspected after storm events
- Attenuation tanks to be cleaned by high flow jetting
- Silt/rock traps to be emptied to prevent culvert blockage

Use

- Trash screen will require regular inspection and clearance
- Trash screen and outfall to be inspected after storm events
- Attenuation tanks to be cleaned by high flow jetting
- Silt/rock traps to be emptied to prevent culvert blockage

Decommissioning / Demolition

- Requirement for services diversions in advance of works to install new culvert
- Potential for encountering unplotted services or private underground services
- access to be maintained to residential and commercial properties
- Presence of asbestos containing materials at Carreg Hir
- Presence of contaminated soils in areas of former industrial use (land at Penrhiwtin)
- Maintaining of existing surface water flows
- Sudden increase in flows

NOTES

1. ALL DIMENSIONS ARE IN MILLIMETRES UNLESS OTHERWISE NOTED.
2. ALL LEVELS ARE IN METRES ABOVE ORDNANCE DATUM UNLESS OTHERWISE NOTED.

Description						
Status	Revision	Drawn	Checked	Reviewed	Authorised	Issue Date
Description						
Status	Revision	Drawn	Checked	Reviewed	Authorised	Issue Date
Description						
Status	Revision	Drawn	Checked	Reviewed	Authorised	Issue Date
Description						
Status	Revision	Drawn	Checked	Reviewed	Authorised	Issue Date
Description For Planning						
S6	P01	DJW	RC	RAM	---	26/05/26

Drawing Suitability: FOR PLANNING — Status: S6

AtkinsRéalis
West Glamorgan House
12 Orchard Street
Swansea
West Glamorgan
SA1 5AD
Tel: +44 (0)1792 641172
Fax: +44 (0)1792 472019
www.atkinsglobal.com

Copyright © AtkinsRéalis (2025)

Client: Neath Port Talbot County Borough Council — Bwrdeistref Sirol Castell-nedd Port Talbot — NEATH PORT TALBOT COUNTY BOROUGH COUNCIL

Project Title: GRANDISON BROOK

Drawing Title: TYPICAL DETAILS SHEET 1 OF 3

Drawing Number: Project NE05_001 - Originator ATK - Volume GEN - Location SWMWREC - Type DR - Role CD - Number 000200

Original Size:	Scale	Project Ref. No:	Sheet:	Rev:
A1	AS SHOWN	5192793	1 of 3	P01