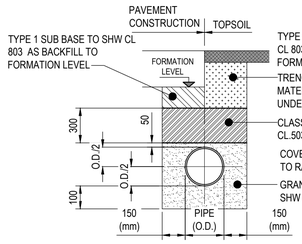

TYPE S BEDDING

GRANULAR BED AND SURROUND UNDER ROAD
(BEDDING FACTION = 2.2)
SCALE 1:20

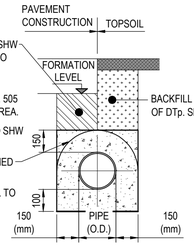

TYPE Z BEDDING

CONCRETE BED AND SURROUND
(BEDDING FACTION = 2.6)
SCALE 1:20

NOTES:
1. REFER TO SHW TABLE 5/3 AND SHW TABLE 6/1
2. BEDDING BENEATH AND AT SIDES OF THE PIPE TO BE WELL COMPACTED IN ACCORDANCE WITH CL 505.
3. CONCRETE CRADLES AND ARCHES MAY BE EXTENDED TO THE SIDES OF THE TRENCH.
4. GEOTEXTILES MAY BE USED WHERE DIRECTED OR APPROVED BY THE ENGINEER TO CONTAIN BEDDING MATERIAL IN CERTAIN SOILS EG. RUNNING SAND.
5. IN VERY WET CONDITIONS, WHERE DIRECTED OR APPROVED BY THE ENGINEER A TEMPORARY LAND DRAIN MAY BE LAID WITHIN THE GRANULAR BED.

NOTES: (TYPE Z ONLY)
6. WHERE PIPES WITH FLEXIBLE JOINTS ARE USED, THE CONCRETE PROTECTION IS TO BE INTERRUPTED OVER ITS FULL CROSS SECTION AT INTERVALS NOT EXCEEDING 5 METRES (OR AS DIRECTED BY THE ENGINEER) BY A SHAPED FORMER OF BITUMEN IMPREGNATED COMPRESSIBLE FILLER. THESE INTERRUPTIONS SHALL COINCIDE WITH PIPE JOINTS. SEE DIMENSIONS FOR PIPE BEDDING TABLE FOR THICKNESS OF COMPRESSIBLE FILLER.
7. CONCRETE TO BE GRADE GEN 3. WHERE FLEXIBLE PIPES ARE USED. CARE MUST BE TAKEN
8. TO PREVENT THE PIPES FROM FLOATING.

BEDDING DETAILS

SCALE 1:20

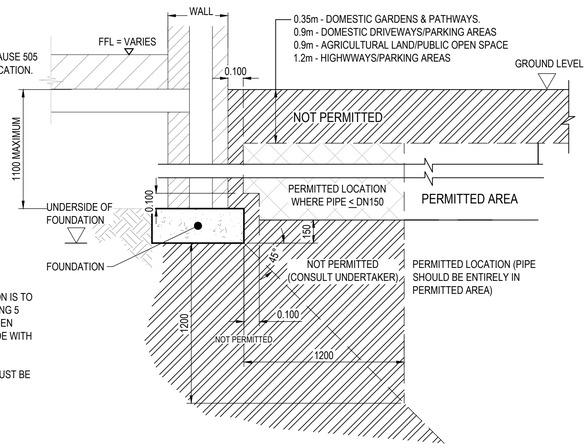

TYPICAL DRAINAGE DETAIL IN CLOSE PROXIMITY OF FOUNDATIONS (DETAIL IN ACCORDANCE WITH SFA FIGURE B1)

NTS

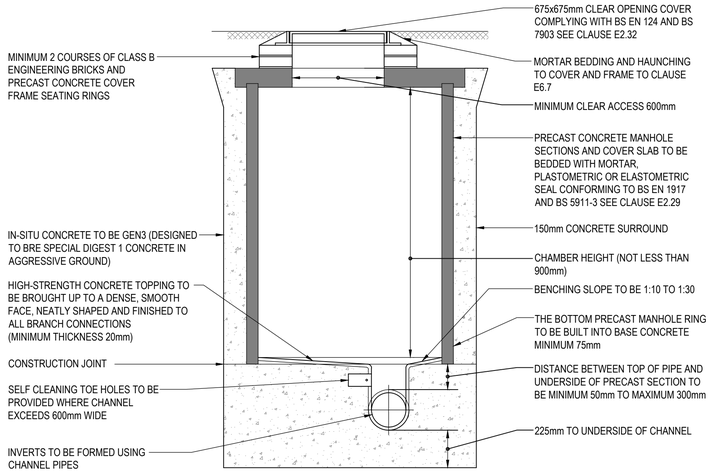

TYPICAL MANHOLE DETAIL TYPE 2 - 1200Ø

(REFER TO FIG. B.12 OF SEWERS FOR ADOPTION 7th ED)
(MAXIMUM DEPTH FROM COVER TO SOFFIT LEVEL OF PIPE - 3.0m)
SCALE 1:20

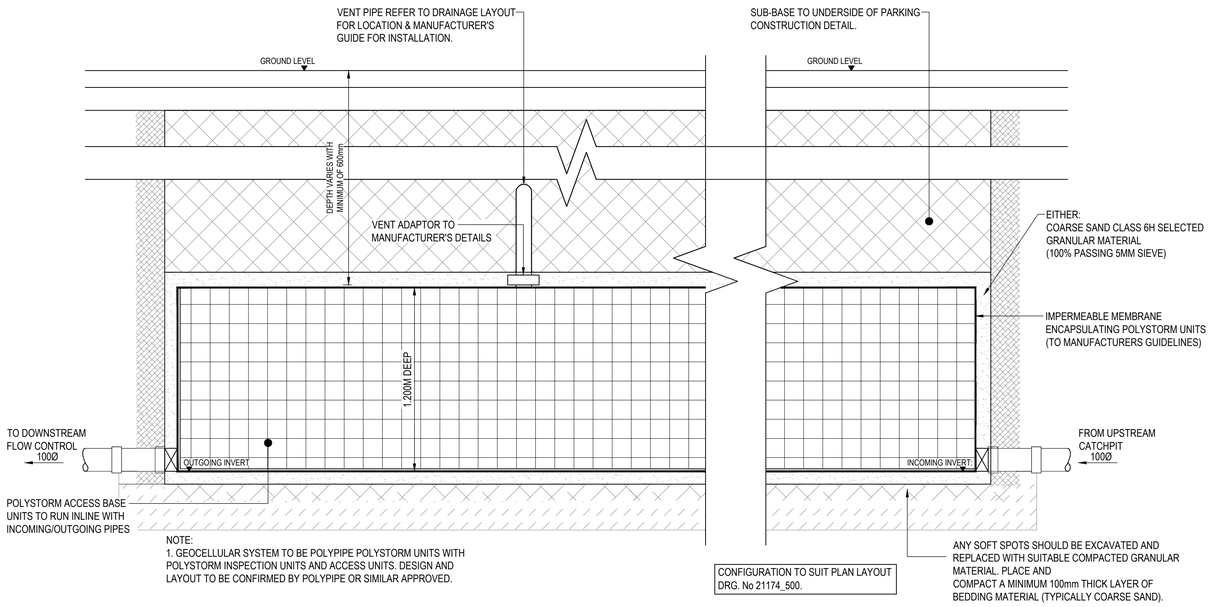

NOTE:
1. GEOCELLULAR SYSTEM TO BE POLYPIPE POLYSTORM UNITS WITH POLYSTORM INSPECTION UNITS AND ACCESS UNITS. DESIGN AND LAYOUT TO BE CONFIRMED BY POLYPIPE OR SIMILAR APPROVED.

CONFIGURATION TO SUIT PLAN LAYOUT DRG. No 21174_500.

ATTENUATION DETAIL

SCALE: NTS

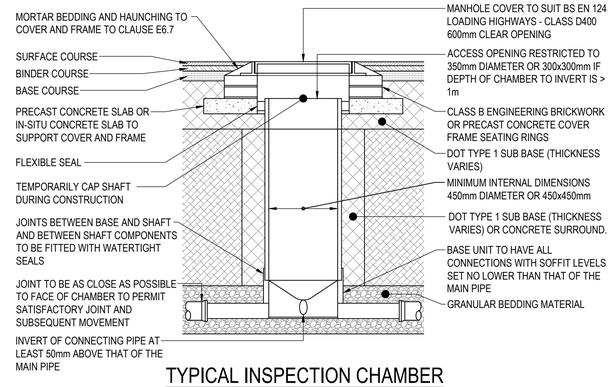

TYPICAL INSPECTION CHAMBER DETAIL - TYPE 3

(REFER TO FIG. B.16 OF SEWERS FOR ADOPTION 7th ED)
(DEPTH FROM COVER LEVEL TO SOFFIT OF PIPE 3m)
(FLEXIBLE MATERIAL DETAIL)

NOTES:

1. ALL DIMENSIONS ARE IN MILLIMETRES UNLESS NOTED OTHERWISE.
2. ALL LEVELS ARE SHOWN IN METRES UNLESS NOTED OTHERWISE.
3. DO NOT SCALE FROM THE DRAWING. USE FIGURED DIMENSIONS ONLY.
4. ANY DISCREPANCIES TO BE REPORTED IMMEDIATELY TO THE ENGINEER.
5. THIS DRAWING TO BE READ IN CONJUNCTION WITH ALL RELEVANT ARCHITECTS, ENGINEERS, SUBCONTRACTORS AND SPECIALISTS DRAWINGS AND SPECIFICATIONS.
6. EXISTING SERVICES HAVE NOT BEEN SHOWN BUT ARE PRESENT - THE CONTRACTOR IS TO LIAISE WITH ALL STATUTORY AUTHORITIES PRIOR TO THE COMMENCEMENT OF ANY WORKS.

NOTE: THE INSTALLATION AND HEALTH AND SAFETY ASPECTS OF THE INSTALLATION - REFER TO MANUFACTURER'S TECHNICAL GUIDE. IF IN DOUBT ASK THE ENGINEER.

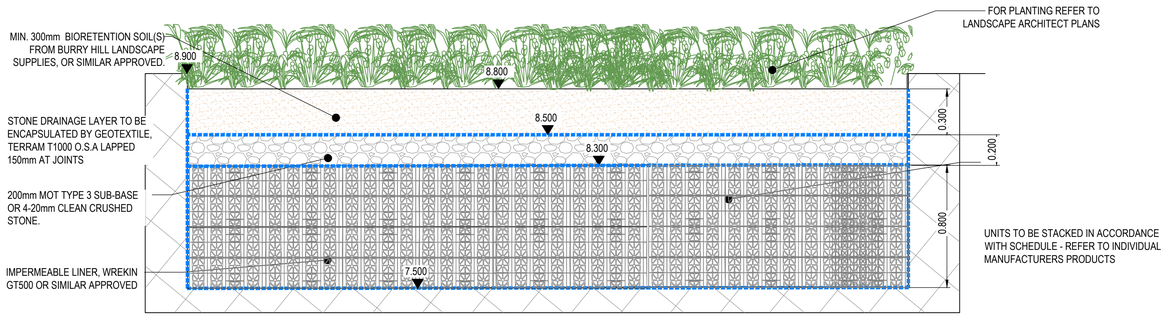

SuDS RAINGARDEN WITH ATTENUATION CRATES CONSTRUCTION DETAIL

SCALE 1:20

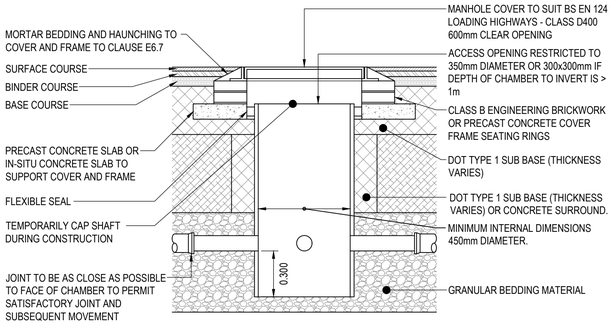

CATCHPIT CHAMBER

N.T.S

rev.	drawn	chkd.	apprvd.	date	description
01	PN	HT	PG	28.01.26	

Client
LIFE PROPERTY GROUP LTD

Project
CRAMIC WAY
PORT TALBOT

Title
DRAINAGE DETAILS
SHEET 1

Vale Consultancy
CONSULTING CIVIL & STRUCTURAL ENGINEERS
29 Bocam Park, Old Field Road, Pencoed, Bridgend CF35 5LJ.
Phone: 01656 863794 Email: enquiries@vale-consultancy.co.uk

date	drawn	checked		approved	
28.01.26	PN	HT	28.01.26	PG	28.01.26

scale @ A1	project no.
AS SHOWN	21174

status	drg. no.	rev.
P	21174_510	01

DRAWING STATUS
A - Approval, AB - As-Built, C - Construction, D - Draft, P - Preliminary, T - Tender