GUIDANCE NOTE 01/21

THE REDUCTION OF OBTRUSIVE LIGHT

Guidance Note

GN01/21

The Reduction of Obtrusive Light

Copyright © 2021 ILP

All rights reserved. No part of this publication may be reproduced, stored in a retrieval system or transmitted in any form or by any means: electronic, electrostatic, magnetic tape, mechanical, photocopying, recording or otherwise, without permission in writing from the Institution of Lighting Professionals.

Institution of Lighting Professionals
Regent House
Regent Place
Rugby
Warwickshire
CV21 2PN

Tel: (01788) 576492
Email: info@theilp.org.uk
Website: www.theilp.org.uk
Registered Charity Number 268547

The Reduction of Obtrusive Light

This Guidance Note supersedes GN01/20 to reflect the changes in international guidance regarding obtrusive light as detailed in *CIE 150: 2017 Guide on the Limitation of the Effects of Obtrusive Light from Outdoor Lighting Installations*[1]. It also considers industry comment regarding the assessment and definition of obtrusive lighting.

Good lighting practice is the provision of the right light, at the right time, in the right place, controlled by the right system.

The invention of artificial light and its application in the external environment has done much to safeguard and enhance our night-time environment but, if not properly controlled, **obtrusive light** (sometimes referred to as light pollution) can present serious physiological and ecological problems.

Obtrusive light, whether it keeps you awake through a bedroom window, impedes your view of the night sky or adversely affects the performance of an adjacent lighting installation, is a form of pollution. It may also be a nuisance in law and can be substantially mitigated without detriment to the requirements of the task.

Sky glow, the brightening of the night sky, **Glare** the uncomfortable brightness of a light source when viewed against a darker background, **Light spill** the spilling of light beyond the boundary of the area being lit and **Light intrusion ('Nuisance')**[2] are all forms of obtrusive light which may cause nuisance to others, or adversely affect fauna & flora as well as waste money and energy.

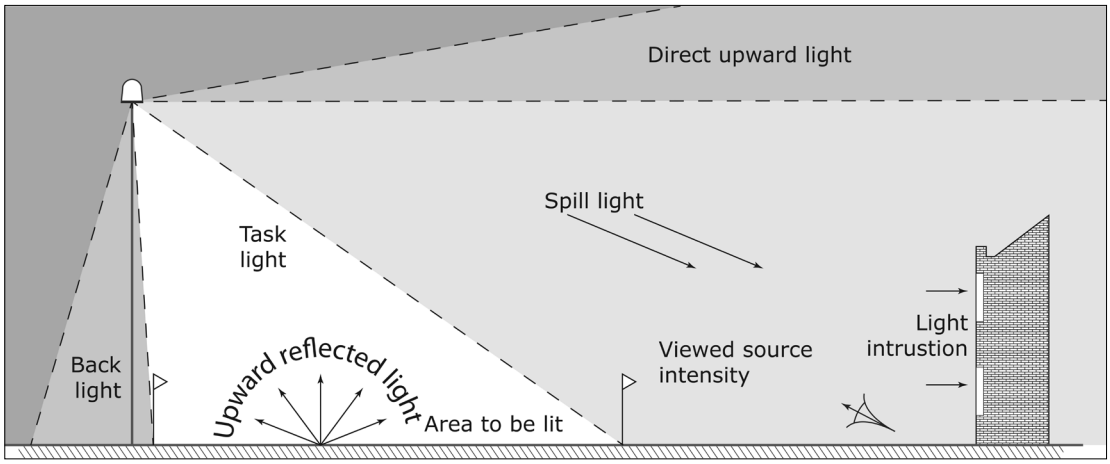

Figure 1: Types of obtrusive light

[1] The copyright of the data detailed within this guide belongs to CIE, email ciecb@cie.co.at
This document should be used in conjunction with CIE 150:2017 and CIE 126:1997 and not as a replacement for the procedures contained therein. These documents can be obtained from http://cie.co.at/publications and members of a National Committee of the CIE can purchase them with a discount of 66.7 %.

[2] The term light trespass has been used in the past and should no longer be referenced, trespass is to physically encroach on land and light can't do that, so the term nuisance or spill light should always be used.

Considerations to be made

Think before you light. Is it necessary? What effect could it have on others? Has it the potential to cause a nuisance? How can you mitigate and manage and potential adverse effects from your lighting installation?

There are published standards and guidance for most lighting tasks adherence to these will help mitigate obtrusive lighting aspects. Organisations from which full details of these standards can be obtained are given later in this Guidance Note.

For the purpose of this Guidance Note, the following two Commission Internationale De L'Eclairage (CIE) documents are specifically referenced, which provide guidance to the mitigation of obtrusive light from exterior lighting installations:

- CIE 150: 2017 Guide on the Limitation of the Effects of Obtrusive Light from Outdoor Lighting Installations
- CIE 126: 1997 Guidelines for Minimizing Sky Glow

When considering any lighting installation then these two documents should be referenced and referred to.

Whilst this guidance Note examines the effects of external lighting installations, other factors should also be considered. Office buildings, residences and shop fronts, with extensive use of glass without blinds, screens or curtains, could become a source of illumination to the exterior environment.

"Good Design Equals Good Lighting"

It cannot be stressed sufficiently that, by employing a competent lighting designer with proven experience in the relevant application, will result in a suitable lighting installation where all obtrusive lighting aspects are mitigated[3].

Any lighting scheme consists of three basic elements: a light source, a luminaire (incorporating the optical control system) and a method of installation / mounting.

[3] Competency can be determined through membership of a professional lighting body supported by the appropriate qualifications and experience in the application of lighting required.

Light sources (Lamps / LEDs)

The light source output in lumens is not the same as the wattage. It is the former that is important in combating the problems of obtrusive light.

Most night-time visual tasks are only dependent on light radiated within the visual spectrum. It is therefore not necessary for light sources to emit either ultra-violet or infra-red radiation unless specifically designed to do so. The majority of light sources used in external lighting do not contain these wavelengths or where they are present their spectral power is very low.

Research indicates that light from the blue end of the spectrum could have important adverse effects on fauna and flora. The lighting designer should consider the blue light spectral power of the light source and try to balance the needs of the task to be lit with any impact on fauna and flora within the environment.

Luminaires

The choice of luminaire with the right optical distribution at the right mounting height is critical to minimising light spill and obtrusive light effects, yet providing the right lighting performance on the task area.

Sky glow is the general diffuse sheen that is visible in the direction of large cities, airports, and industrial complexes. It occurs from both natural and artificial light sources and does not depend exclusively on the lighting design. It also depends on the atmospheric conditions (humidity, aerosols, clouds, haze, atmospheric pollution, etc.). Light propagating into the atmosphere either directly from upward directed or incompletely shielded sources, or after reflection from the ground or other surfaces, is partially scattered back towards observers on the ground; the impact being shown in table 1.

Table 1: The effect on the ability to view the night sky at various angles

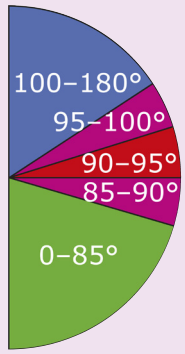

Indicative diagram

Angle of light emitted (degrees)	Sky glow effect	Glare effect
100 - 180	Local	Little
95 - 100	Significant	Some
90 - 95	High	High
85 - 90	Significant	High
0 - 85	Minimum	Some

It is therefore important to consider the luminaire, its light distribution, how it is installed and how it is set up.

For most general sports and area lighting installations the use of luminaires with asymmetric optics is preferred. This type of optic should be designed and installed so that the front glazing is kept at or near horizontal; parallel to the surface to be lit or ground. if correctly designed, installed and aimed correctly should ensure minimising obtrusive light.

Appendices 1 and 2 give more details of how to choose, and if necessary, through the use of louvres and shields, modify luminaires.

Installation

In most cases it will be beneficial to use as high a mounting height as possible, giving due regard to the daytime appearance of the installation.

It should be noted that a lower mounting height can be worse as can be seen from figures 2 and 3 from CIE 150. A lower mounting height can create a higher level of light spill and require additional lighting points.

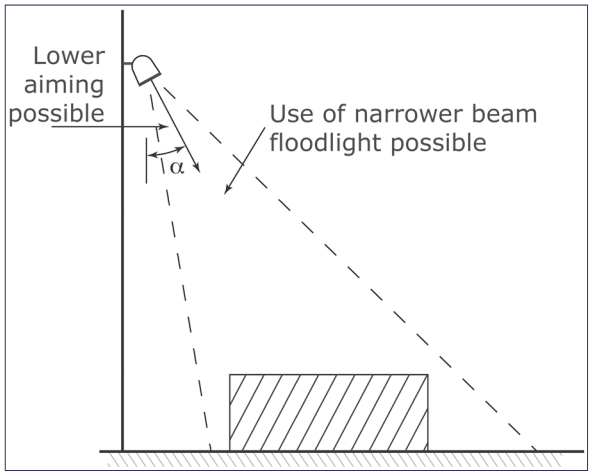

✔ *Figure 2a: Higher mounting height – less spill light and glare*

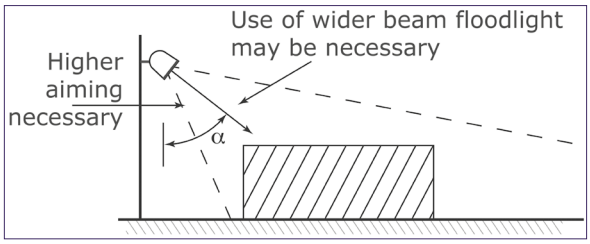

✖ *Figure 2b: Lower mounting height – more spill light and glare*

Keep glare to a minimum by ensuring that the main beam angle of all luminaires directed towards any potential observer is no greater than 70°. Higher mounting heights allow lower main beam angles, which can assist in reducing glare.

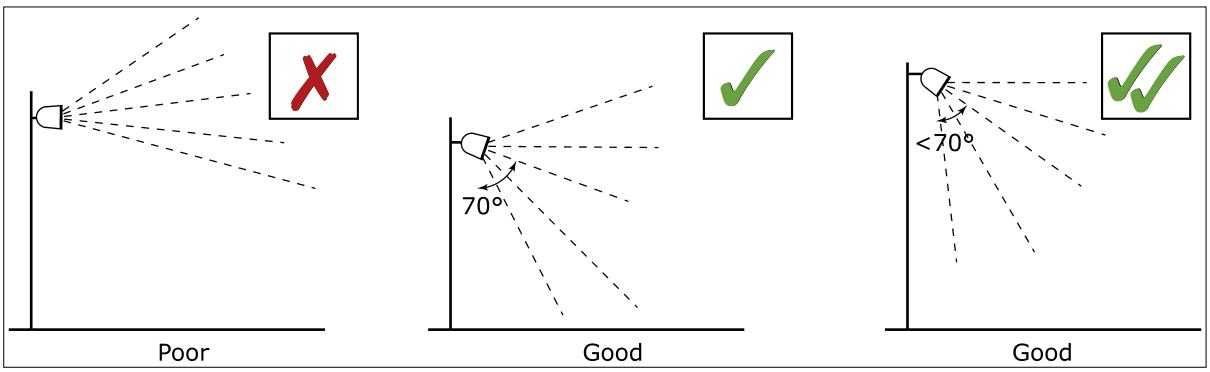

Figure 3: Luminaire aiming angles

In areas with low ambient lighting levels, glare can be very obtrusive and extra care should be taken when positioning and aiming lighting equipment. With regard to domestic security lighting, the ILP produces an information leaflet GN09:2019 "Domestic exterior lighting, getting it right!" that is freely available from its website.

When lighting vertical structures such as advertising signs, direct light downwards wherever possible. If there is no alternative to up-lighting, as with much decorative lighting of buildings, then the use of luminaires with the correct optical distribution coupled where required with shields, baffles and louvres will help reduce spill light around and over the structure to a minimum.

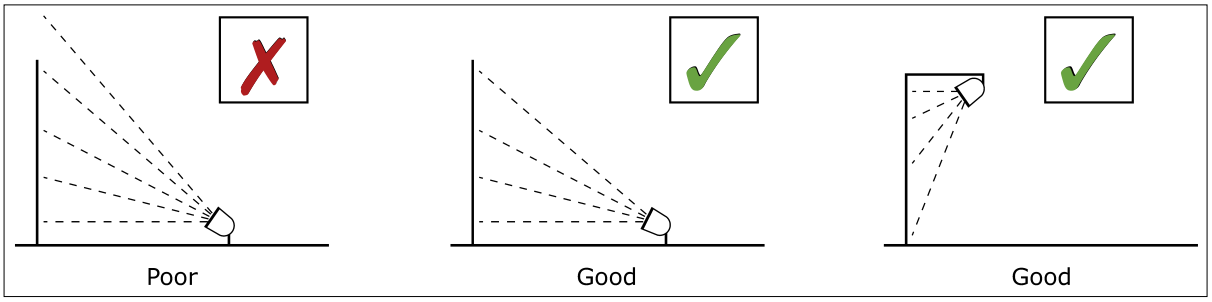

Figure 4: Façade illumination

For road and amenity lighting installations light near to and above the horizontal should normally be minimised to reduce glare and sky glow (Note the Upward Lighting Ratios (ULR's) advised in Tables 5 and 6). In rural areas the use of full horizontal cut off luminaires installed at 0° uplift will, in addition to reducing skyglow, also help to minimise visual intrusion within the open landscape. However, in some urban locations, luminaires fitted with a more decorative bowl and good optical control of light should be acceptable and may be more appropriate.

Clean Neighbourhoods and Environment Act (CNEA) 2005

The Clean Neighbourhoods and Environment Act (CNEA) 2005 gives Local Authorities and the Environment Agency additional powers to deal with a wide range of issues by classifying artificial light emitted from defined premises as a statutory nuisance.

The CNEA 2005 amended section 79(1) of the Environmental Protection Act 1990 to extend the statutory nuisance regime to include light nuisance stating the following:

> *'(fb) artificial light emitted from premises so as to be prejudicial to health or a nuisance'.*

Guidance produced on Sections 101 to 103 of the CNEA 2005 by DEFRA (DEFRA, April 2006) extends the duty on local authorities to ensure their areas are checked periodically for existing and potential sources of statutory nuisances, including nuisances arising from artificial lighting. Local authorities must take reasonable steps to investigate complaints of such nuisances from artificial light. Once satisfied that a statutory nuisance exists or may occur or recur, local authorities must issue an abatement notice (in accordance with section 80(2) of the Environmental Protection Act 1990), requiring that the nuisance cease or be abated within a set timescale.

National Planning Policy Framework (NPPF)

The NPPF was introduced as a more concise and useable planning document to aid developers and designers in the design and construction of developments within the UK.

The National Planning Policy Framework 2019 makes little reference to lighting with regard to the control of obtrusive light, the only reference states:

> *c) limit the impact of light pollution from artificial light on local amenity, intrinsically dark landscapes and nature conservation.*

Many Local Planning Authorities (LPAs) have already produced, or are producing, policies that within the planning system will become part of their local development framework. For new developments there is an opportunity for LPAs to impose planning conditions related to external lighting, including curfew* hours.

* Curfew: The time after which stricter requirements (for the control of obtrusive light) will apply; often a condition of use of lighting applied the local planning department. Depending upon application curfew times often commence between 21:00 to 23:00 and may run until 07:00. However, exact curfew hours should be carefully applied to ensure the reduction of obtrusive light is prioritised within the immediate environment and towards sensitive human as well as fauna and flora receptors.

National Planning Policy

The national on-line planning guidance resource looks at when lighting pollution concerns should be considered;

The guidance provides a high level overview for planners with links to a few appropriate documents to give planners an overview of the subject through seven discussion points as follows:

- When is light pollution relevant to planning
- What factors should be considered when assessing whether a development proposal might have implications for light pollution
- What factors are relevant when considering where light shines
- What factors are relevant when considering when light shines
- What factors are relevant when considering how much the light shines
- What factors are relevant when considering possible ecological impact
- What other information is available that could inform approaches to lighting and help reduce light pollution

Artificial light requires consideration at the planning stage. To ensure that any proposed lighting installation conforms to the requirements of an area and its intended task, planners should consult with a competent lighting professional. The appropriate planning conditions for the project can then be established, the application reviewed, and the final performance of the installation confirmed.

The Scottish Executive has published a design methodology document (March 2007) entitled *"Controlling Light Pollution and Reducing Energy Consumption",* to further assist in mitigating obtrusive light elements at the design stage.

Environmental Zones

It is recommended that Local Planning Authorities specify the following environmental zones for exterior lighting control within their Development Plans.

Table 2: Environmental zones

Zone	Surrounding	Lighting environment	Examples
E0	Protected	Dark (SQM 20.5+)	Astronomical Observable dark skies, UNESCO starlight reserves, IDA dark sky places
E1	Natural	Dark (SQM 20 to 20.5)	Relatively uninhabited rural areas, National Parks, Areas of Outstanding Natural Beauty, IDA buffer zones etc.
E2	Rural	Low district brightness (SQM ~15 to 20)	Sparsely inhabited rural areas, village or relatively dark outer suburban locations
E3	Suburban	Medium district brightness	Well inhabited rural and urban settlements, small town centres of suburban locations
E4	Urban	High district brightness	Town / City centres with high levels of night-time activity

Note 1 Where an area to be lit lies close to the boundary of two zones the obtrusive light limitation values used should be those applicable to the most rigorous zone (see comment below)

Note 2 Rural zones under protected designations should use a higher standard of policy

Note 3 Zone E0 must always be surrounded by an E1 Zone

Note 4 Zoning should be agreed with the local planning authority. Due to local requirements a more stringent zone classification may be applied to protect special / specific areas

Note 5 SQM (Sky Quality Meter) is referenced by the International Dark Skies Association (IDA). SQM is an instrument used to measure the luminance of the night sky. It is typically used by astronomers to quantify skyglow, using units of magnitudes per square arcsecond. the scale is between 16:00 (a bright night sky) and 22:00 (the least light pollution). The criteria for zone E0 was revised in mid 2019, with the new requirements not being made retrospective

Note 6 Astronomical Observable Dark Skies will offer clearer views of the Milky Way and of other objects such as the Andromeda Galaxy and the Orion Nebula

Note 7 Although values of SQM 20 to 20.5 may not offer clear views of astronomical dark sky objects such as the Milky Way, these skies will have their own relative intrinsic value in the UK

Adjacent Zone Considerations

As advised in Note 1 to Table 2, where an area to be lit lies within visual distance of the boundary between two zones then the obtrusive light values applicable to the most rigorous zone shall apply. Figure 5 demonstrates this. For an observer located within or at the boundary of a more rigorous zone (E(X-1)) compared to the adjacent less rigorous zone (E(X)) then when the observer faces the less rigorous zone they will only be exposed to obtrusive lighting level pertinent to the zone within which they are located.

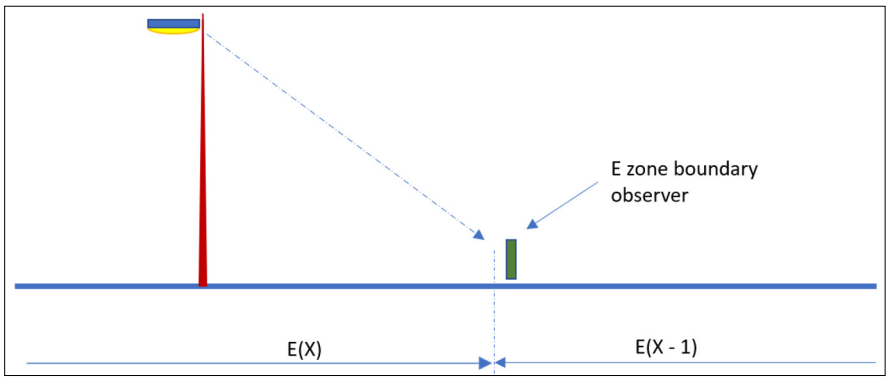

Figure 5: boundary zone considerations

Design Guidance

The following limitations based upon CIE150 may be supplemented or replaced by an LPA's own planning guidance for exterior lighting installations. As lighting design is not as simple as it may seem, you are advised to consult and/or work with a competent professional lighting designer when considering any exterior lighting.

Recommended Maximum Values of Light Parameters for the Control of Obtrusive Light

Limitation of illumination on surrounding premises

Light intrusion / nuisance

Table 3 (CIE 150 table 2): Maximum values of vertical illuminance on premises

Light technical parameter	Application conditions	Environmental zone				
		E0	E1	E2	E3	E4
Illuminance in the vertical plane (E_v)	Pre-curfew	n/a	2 lx	5 lx	10 lx	25 lx
	Post-curfew	n/a	<0.1 lx*	1 lx	2 lx	5 lx

* If the installation is for public (road) lighting then this may be up to 1 lx.

Limits apply to nearby dwellings / premises or potential dwellings / premises and specifically windows. The values are the summation of all lighting installations.

Spill light

Table 3 can also be considered for the management of spill light; however, designers must consider the task performance requirements of any adjacent lit areas and ensure that any spill light does not adversely affect these performance parameters as this could affect their safe use. This may result in a need to minimise spill and intrusive lighting values to less than might be expected for the environmental zone within which the installation lies.

Limitation of bright luminaires in the field of view

The limits for the luminous intensity of bright luminaires are dependent on the viewing distance *d*, (between the observer and the bright luminaire(s)) and the projected area A_p, of the bright part of the luminaire in the direction of the observer.

Table 4 shows the maximum values for the luminous intensity of luminaires in designated directions where views of bright surfaces of luminaires are likely to be a nuisance to occupants of premises, or from positions where such views are likely to be maintained, i.e. not for momentary or short-term viewing.

Table 4 (CIE 150 table 3): Limits for the luminous intensity of bright luminaires[4]

Light technical parameter	Application conditions	Luminaire group (projected area A_p in m²)					
		$0<A_p \leq 0.002$	$0.002<A_p \leq 0.01$	$0.01<A_p \leq 0.03$	$0.03<A_p \leq 0.13$	$0.13<A_p \leq 0.50$	$A_p > 0.5$
Maximum luminous intensity emitted by luminaire (*I* in cd)[5]	E0 Pre-curfew Post-curfew	0 0	0 0	0 0	0 0	0 0	0 0
	E1 Pre-curfew Post-curfew	0.29 *d* 0	0.63 *d* 0	1.3 *d* 0	2.5 *d* 0	5.1 *d* 0	2,500 0
	E2 Pre-curfew Post-curfew	0.57 *d* 0.29 *d*	1.3 *d* 0.63 *d*	2.5 *d* 1.3 *d*	5.0 *d* 2.5 *d*	10 *d* 5.1 *d*	7,500 500
	E3 Pre-curfew Post-curfew	0.86 *d* 0.29 *d*	1.9 *d* 0.63 *d*	3.8 *d* 1.3 *d*	7.5 *d* 2.5 *d*	15 *d* 5.1 *d*	10.000 1,000
	E4 Pre-curfew Post-curfew	1.4 *d* 0.29 *d*	3.1 *d* 0.63 *d*	6.3 *d* 1.3 *d*	13 *d* 2.5 *d*	26 *d* 5.1 *d*	25,000 2,500

Note 1 *d* is the distance between the observer and the glare source in metres;

Note 2 A luminous intensity of 0 cd can only be realised by a luminaire with a complete cut-off in the designated directions;

Note 3 A_p is the apparent surface of the light source seen from the observer position

Note 4 For further information refer to Annex C of CIE 150

Note 5 Upper limits for each zone shall be taken as those with column A_p>0.5

Considerations to aid the application of Table 4 and the assessment process.

- The assessment of A_p for observers can prove difficult and will vary for all observer positions and distances.
- The above information is applicable for the consideration of a single luminaire, but where two or more luminaires are located in close proximity to each other that to the observer they appear as a single light source, then the assessment shall be undertaken based upon the combined bright surfaces of luminaires (A_p) in the direction of the observer or, from positions where such views are likely to be maintained.
- In installations that involve lighting poles, towers or columns, the luminaires will often be viewed against the night sky. The contrast between the background sky and the bright surface areas of the luminaires can be considerable. In such installations the curfew levels

[4] Amended based upon the approach taken by NSVV Nederlandse Stichting Voor Verlichtingskunde (Dutch: Dutch Foundation for Illumination; The Netherlands) and to consider CIE150 Annex C Table C.2

set for each environmental zone shall be applied, with the exception that such installations within an E4 zone will be designed to suit the curfew requirements of an E3 zone.

Appendix 3 provides a supplementary guidance to aid the application and use of Table 4.

Limitation of the effects on transport systems

Limits apply where users of road networks are subject to a reduction in the ability to see essential information. CIE 150 2017; Table 4 gives values that are for relevant positions and for viewing directions in the path of travel.

This assessment does not just apply to road lighting installations, but to any installation where luminaires' positioning falls under the above definition i.e. luminaires visible from the road network.

For non-road lighting installations where Threshold Increment (TI) cannot be established look to GN01 Table 4 source intensity limitations.

Table 5 (CIE 150; table 4): Maximum values of Threshold Increment and viewing direction in the path of travel

Light technical parameter	Road classification[1]			
	No road lighting	M6 / M5	M4 / M3	M2 / M1
Veiling luminance[2] (L_v)	0.037 cd/m²	0.23 cd/m²	0.40 cd/m²	0.84 cd/m²
Threshold Increment	15% based on adaption luminance of 0.1 cd/m²	15% based on adaption luminance of 1.0 cd/m²	15% based on adaption luminance of 2.0 cd/m²	15% based on adaption luminance of 5 cd/m²

Note 1 Road classifications as given in CIE 115:2010

Note 2 The veiling luminance values specified in this table are based upon on a permissible TI value of 15%

Definitions:

TI The measure of disability glare expressed as the percentage increase in contrast required between an object and its background for it to be seen equally well with a source of glare present. Note: Higher values of TI correspond to greater disability glare, the reduction in visibility caused by intense light sources in the field of view.

L_v The luminance that would need to be superimposed on a scene in object space to reduce the scene's contrast by an amount equal to the added retinal illuminance from scattered light on the scene's retinal image. It is most commonly used to describe the contrast-reducing effect of a glare source in the field of view.

Limitation of skyglow

Table 6 (CIE 150 table 5): Maximum values of upward light ratio (ULR) of luminaires

Light technical parameter	Environmental zones				
	E0	E1	E2	E3	E4
Upward light ratio (ULR) / %	0	0	2.5	5	15

Note 1 This is the primary approach to limit skyglow and is suitable to compare different single luminaires and mitigate the contribution of each luminaire within an installation.

Note 2 This does not take into account the effect of light reflected upwards from ground that also contributes to skyglow.

Note 3 Some lighting schemes will require the deliberate and careful use of upward light, e.g. ground recessed luminaires, ground mounted floodlights and festive lighting, to which these limits cannot apply. However, care should always be taken to minimise any upward waste light by the proper application of suitably directional luminaires and light controlling attachments.

Table 7 (CIE 150 table 6): Maximum values of upward flux ratio of installation (of four or more luminaires)

Light technical parameter	Type of installation	Environmental zones				
		E0	E1	E2	E3	E4
Upward flux ratio (UFR) / %	Road	n/a	2	5	8	12
	Amenity	n/a	n/a	6	12	35
	Sports	n/a	n/a	2	6	15

Table 7 allows the effect of both direct and reflected upward components of a whole installation to be considered. The factor being the upward flux ratio (UFR).

Note n/a within table 7 denotes that lighting of this type is not usually expected within these zones

This should only be considered where an installation consists of four or more luminaires that form an installation with a defined performance requirement or specialised fauna growth lighting systems (such as those use to promote grass growth in sports stadia) and is in proximity to:

- Optical observatories
- Lies within dark (E1) zones which abuts a protected (E0) dark sky zone

Note 1 The effect of distance must be considered which is a factor of the artificial lighting installation size. A small lighting installation will have an effect on an optical observatory 30km away whereas a large lighting installation of many luminaires will have an effect from a greater distance up to 100km. Specific guidance is given in CIE126 and CIE150.

Note 2 All external surfaces will have varying reflectances depending upon their condition and climatic conditions (wet, dry, frost etc,) as well as their varying angles, therefore the level of uncertainty in any assessment may be considerable.

Clauses 6.4.2 and 6.4.3 of CIE 150: 2017 describe the calculation methods for both ULR and UFR.

As discussed in Table 1, light emitted just above the horizontal in a zone between 80° and 110° is extra critical for skyglow in large open areas around observatories. An additional measure in these areas limits the luminous intensities (I_{80} – I_{110}) as follows:

- Between 80° and 90° < 2.0 cd/ 1000lm
- Between 90° and 100° < 0.5 cd/1000lm
- Between 100° and 110° 0 cd (0.5% of total luminaire lumens for bollard luminaires)

Note All proposed luminaires must have been photometrically measured so that results can be verified for Gamma angles 0 to 180°.

Limitations of the effect of over-lit building facades and signs

Table 8 provides recommendations regarding luminance values that provide visibility in order that a balanced urban lighting master plan can be considered. This lighting does not cause negative impacts such as a continuous increase in the lighting levels (or ratcheting) between buildings and within areas creating light pollution.

Illuminated advertising signage should be assessed as advised in the Institutions Professional Lighting Guide 05 (PLG05); The Brightness of Illuminated Advertisements.

Table 8 (CIE 150 table 7): Maximum permitted values of average surface luminance

Light technical parameter	Application conditions	Environmental zones				
		E0	E1	E2	E3	E4
Building façade luminance (L_b)	Taken as the product of the design average illuminance and reflectance divided by π	< 0.1 cd/m²	< 0.1 cd/m²	5 cd/m²	10 cd/m²	25 cd/m²
Sign luminance (L_s)	Taken as the product of the design average illuminance and reflectance divided by π (pi), or for self-luminous signs, its average luminance	< 0.1 cd/m²	50 cd/m²	400 cd/m²	800 cd/m²	1.000 cd/m²

Note The values apply to both pre- and post-curfew, except that in Zones 0 and 1 the values shall be zero post-curfew. The values for signs do not apply to signs for traffic control purposes.

For illuminated advertising signs the aim should be to achieve the limits advised in PLG05.

Relevant Publications and Standards

British Standards

BS 5489-1:2020 Code of practice for the design of road lighting – Part 1 Lighting of roads and public amenity areas

BS EN 13201-2:2015 Road lighting; Part 2: Performance requirements

BS EN 13201-3:2015 Road lighting; Part 3: Calculation of performance

BS EN 13201-4:2015 Road lighting; Part 4: Methods of measuring lighting performance

BS EN 12193:2018 Light and lighting; Sports lighting

BS EN 12464-2:2014 Lighting of work places; Outdoor work places

PD CEN TR 13201-1:2014 Road lighting; Guidelines on selection of lighting classes

BS EN 12464-2:2014 Light and lighting; Lighting of work places; Part 2 Outdoor work places

CIE publications

001 Guidelines for minimizing urban skyglow near astronomical observatories

CIE 094-1993 Guide for flood lighting

CIE 112-1994 Glare evaluation system for use within outdoor sport and area lighting

CIE 115:2010 Lighting of roads for motor and pedestrian traffic

CIE 126:1997 Guidelines for Minimising Sky Glow

CIE 129:1998 Guide for lighting exterior working areas

CIE 136:2000 Guide to the lighting of urban areas

CIE 150:2017 Guide on the Limitation of the Effects of Obtrusive Light from Outdoor Lighting Installations

CIE 169:2005 Practical design guidelines for the lighting of sport events for colour

ILP publications

PLG 04 Guidance on undertaking environmental lighting impact assessments

PLG 05 The brightness of illuminated advertisements

PLG 06 Guidance on seasonal decorations and lighting column attachments

GN 09 Domestic Security Lighting: Getting it right!

SLL / CIBSE Publications

LG 01: The industrial environment (2018)

LG 04: Sports lighting

LG 06/16: The exterior environment

LGLOL Guide to limiting obtrusive light

NB: These notes are intended as guidance only. The application of the values given in the various tables should be given due consideration along with all other factors in the lighting design. Lighting is a complex subject with both objective and subjective criteria to be considered. The notes are therefore no substitute for professionally assessed and designed lighting undertaken and assessed by a competent lighting professional, where the various and maybe conflicting visual requirements need to be balanced.

© 2021 **The Institution of Lighting Professionals.** Permission is granted to reproduce and distribute this document, subject to the restriction that the *complete* document must be copied, without alteration, addition or deletion.

Acknowledgements

Allan Howard	*WSP (Chair)*
Peter Raynham	*UCL*
Dan Oakley	*South Downs National Park*
Appendix 2 images	*acdc*
Cover image	*Allan Howard*

Appendix 1

Outdoor luminaire classification system

Based upon CIE 150:2017 and for the purpose of this and associated documents the following figures illustrate the luminaire classification (CIE 150:2017)

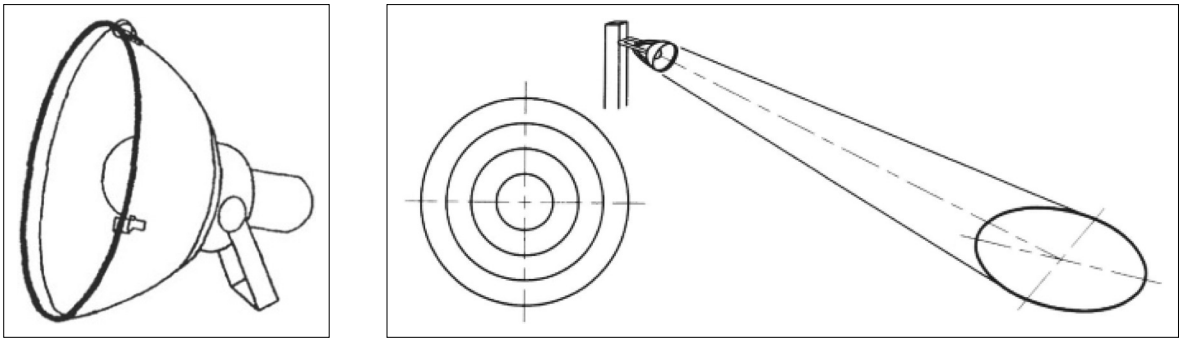

Type A flood light / projector producing a symmetrical beam

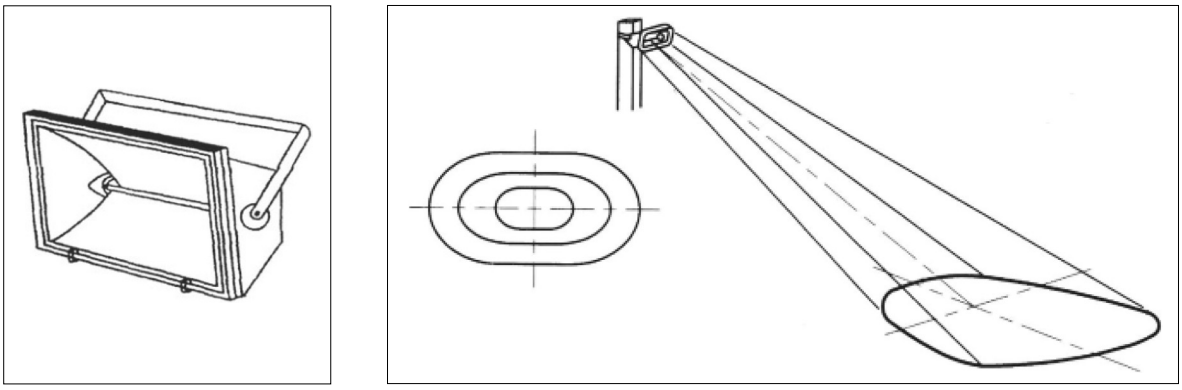

Type B flood light / projector producing a fan-shaped beam

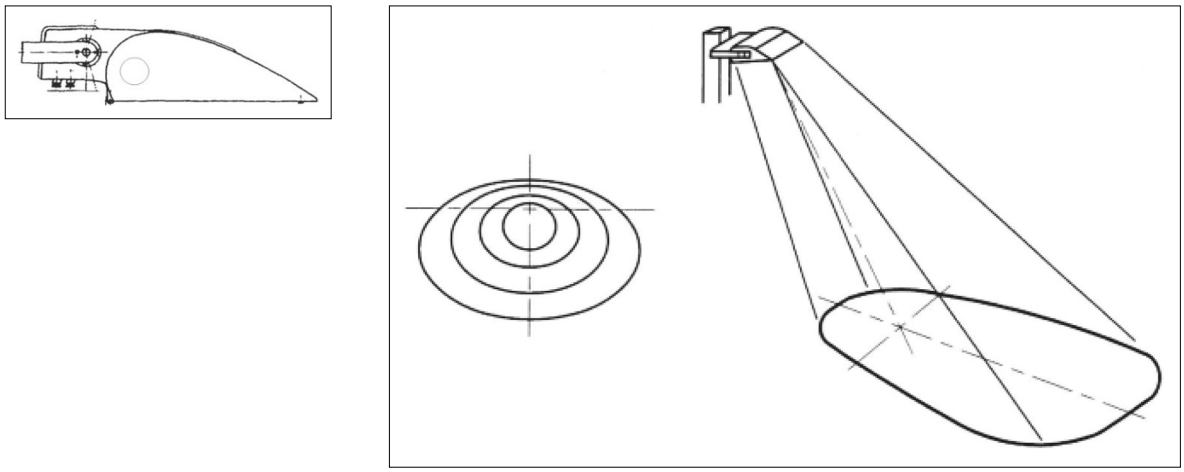

Type C flood light / projector producing a double asymmetric distribution in the vertical plane

Appendix 2

Illustrations of luminaire accessories for limiting obtrusive light

Luminaire with cowl, hood & shield

With louvre

With cowl

Appendix 3

Supplementary guidance

Limits for the luminous intensity of bright luminaires

The ILP's Guidance notes for the reduction of obtrusive light 2011 and CIE 150:2003 only advised of a single limiting luminaire intensity based upon an environmental zone and pre / post curfew assessment. This approach did not take into consideration the fact that intensity is a factor of illuminance at the observer multiplied by the square of the distance to the source. As we know, the illuminance received is a factor of the inverse square law, as well as the size of the source.

GN01/20 superseded by GN01/21, as well as CIE150:2017 now take this into consideration, but with few exceptions lighting design software has yet to catch up with the requirements.

The assessment of intensity as advised within Table 4 has been developed to assist the competent professional lighting designer in making the considerations necessary. At this time, and until software is available to assist the designer, they must make their best professional judgement and undertake some manual assessments, calculations and reviews, based upon software that is currently available to determine compliance or otherwise with intensity limits and values.

This should be considered as follows:

1. *Observer position (d)*

   The closest observer position will be the most onerous, so for any given installation determine where the most realistic closest maintained observer position will be. This is where the luminous intensity will be greatest, and should therefore set the limiting assessment value.

2. *Determine the luminaire group (projected area A_p)*

   As can be seen in Image 1, whilst all the luminaires are of the same size, their apparent projected area A_p is different for each one from a single observer position.

Image 1: Change in projected area based upon observer position

In general, for the same observer distance (d) a luminaire with a smaller A_p will cause the greater concern regarding luminous intensity.

Where the designer knows the expected A_p of the installed luminaire, then this figure can be used to determine the luminaire group in Table 4. Where this factor is unknown then the bottom three rows of table 4 (amended below) are provided as an aid to gauging A_p and are based upon CIE150:2017 Annex C. This approach groups ranges of luminaires by diameter, extracts a geometric mean diameter for each group and provides a corresponding A_p for application (if your luminaire is square then you will need to do a calculation based upon area), so this can be used to assign the luminaire group. Whilst this is for circular luminaires the designer will need to make their best professional judgement for all shapes of luminaires and the expected A_p towards each observer.

Table 4 (CIE150 Table 3 (amended)), limits for the luminous intensity of bright luminaires[5]

Light technical parameter	Application conditions	Luminaire group (projected area A_p in m²)					
		$0<A_p \leq 0.002$	$0.002<A_p \leq 0.01$	$0.01<A_p \leq 0.03$	$0.03<A_p \leq 0.13$	$0.13<A_p \leq 0.50$	$A_p > 0.5$
Maximum luminous intensity emitted by luminaire (*I* in cd)[5]	E0 Pre-curfew Post-curfew	0 0	0 0	0 0	0 0	0 0	0 0
	E1 Pre-curfew Post-curfew	0.29 *d* 0	0.63 *d* 0	1.3 *d* 0	2.5 *d* 0	5.1 *d* 0	2,500 0
	E2 Pre-curfew Post-curfew	0.57 *d* 0.29 *d*	1.3 *d* 0.63 *d*	2.5 *d* 1.3 *d*	5.0 *d* 2.5 *d*	10 *d* 5.1 *d*	7,500 500
	E3 Pre-curfew Post-curfew	0.86 *d* 0.29 *d*	1.9 *d* 0.63 *d*	3.8 *d* 1.3 *d*	7.5 *d* 2.5 *d*	15 *d* 5.1 *d*	10.000 1,000
	E4 Pre-curfew Post-curfew	1.4 *d* 0.29 *d*	3.1 *d* 0.63 *d*	6.3 *d* 1.3 *d*	13 *d* 2.5 *d*	26 *d* 5.1 *d*	25,000 2,500
Aid to gauging A_p Luminaire diameter		**2 to 5 cm**	**5 to 10 cm**	**10 to 20 cm**	**30 to 40 cm**	**40 to 80 cm**	**>80 cm**
Geometric mean of diameter (cm)		3.2	7.1	14.1	26.3	56.6	>80
Corresponding A_p representative area (m²)		0.0008	0.004	0.016	0.063	0.251	>0.5

Note 6 *d* is the distance between the observer and the glare source in metres

Note 7 A luminous intensity of 0 cd can only be realised by a luminaire with a complete cut-off in the designated directions

[5] Amended based upon the approach taken by NSVV Nederlandse Stichting Voor Verlichtingskunde (Dutch: Dutch Foundation for Illumination; The Netherlands) and to consider CIE150 Annex C Table C.2

Note 8 A_p is the apparent surface of the light source seen from the observer position

Note 9 For further information refer to Annex C of CIE 150

Note 10 Upper limits for each zone shall be taken as those with column A_p>0.5

To aid this assessment, values of A_p corresponding to the geometric mean diameter of each circular luminaire group have been extracted from CIE150 Annex C and included within Table 3. These areas can be considered for an assessment of likely A_p in the observer direction to calculate a maximum luminous intensity value.

3. Determining the maximum luminous intensity emitted

This is just a matter of looking down the luminaire group and to the appropriate environmental zone, and determining the calculation required for pre and post curfew levels. This will advise the designer / assessor of the maximum permitted luminous intensity for that observer position and luminaire. Existing software can then be used based upon observer position and the value of intensity advised by the programme manually compared to the limited value determined from Table 4.

The additional notes b) multiple luminaires and c) luminaires viewed against the night sky within GN01/20 for the consideration of the limitation of bright luminaires in the field of view should also be considered.

Example:

1. 15 cm luminaire

We are working in an E2 zone, the luminaire has a diameter of 15cm and the realistic expected maintained nearest observer position is 100m away.

Based upon Table 4, this advises that the geometric mean of diameter is 14.1cm, and the corresponding representative A_p is 0.016. This places it within the luminaire group $0.01 < A_p \leq 0.03$ m^2 grouping. Reading down this column to E2, the pre-curfew maximum luminous intensity calculation is 2.5d where d from our case is 100m.

The limiting intensity to the identified observer is therefore 2.5 x 100 = 250 cd

2 44 cm luminaire

We are working in an E3 zone, the luminaire has a diameter of 44 cm and the realistic expected maintained nearest observer is 80m away.

Based upon Table 4, this advises that the geometric mean of diameter is 56.6cm, and the corresponding representative A_p is 0.251. This places it within the luminaire

group $0.13 < A_p \leq 0.50$ m^2 grouping. Reading down this column to E3, the pre-curfew maximum luminous intensity calculation is 15d where d from our case is 80m.

The limiting intensity to the identified observer is therefore 15 x 80 = 1,200 cd

Assessment

In both cases these are the values the competent lighting designer needs to use within the assessment calculations. If the lighting design software is CIE150:2017 compliant it will do this, however this may require the designer to make manual assessments between intensity values advised through existing software, and the limitation required for each observer, and adjust their design until it is compliant.