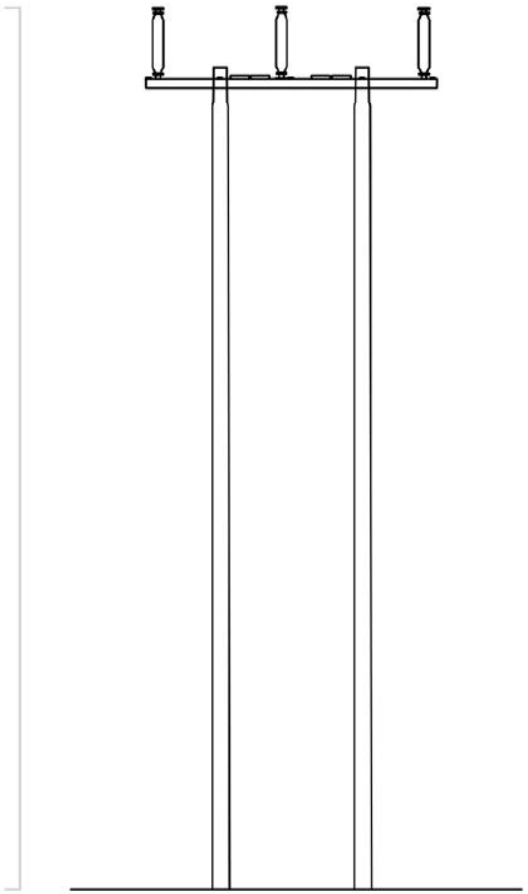

Typical H-Pole

Pennant Walters
Foel Trawsnant Grid Connection
Environmental Statement

Typical H-Pole

Figure 3
(Sheet 1 of 2)

March 2025

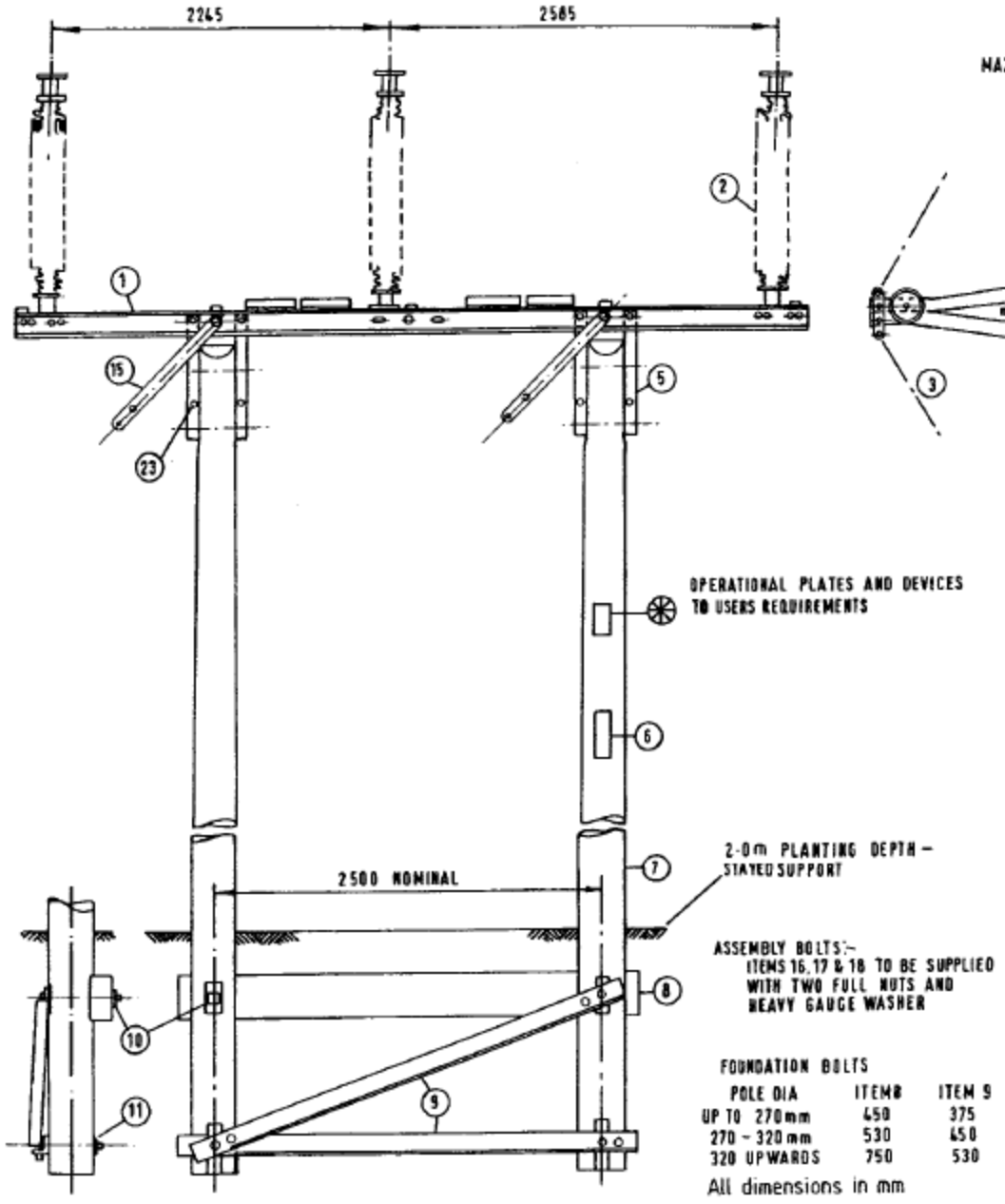

MAXIMUM ANGLE OF DEVIATION 75°

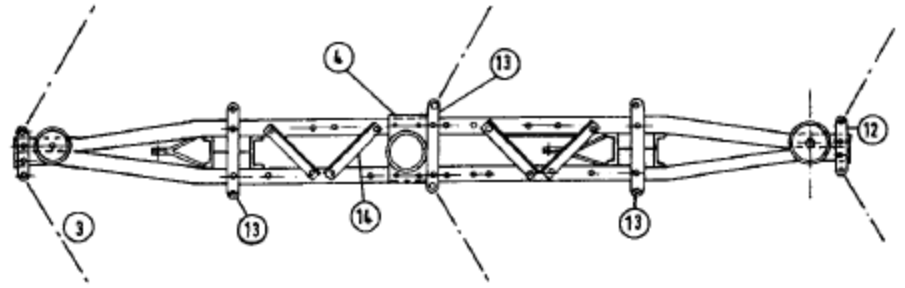

ITEM 13
OUTER LONG TYPE STRAPS ARE FITTED TO BRACE THE CROSSARM AND MUST REMAIN IN POSITION. MAY BE USED FOR STAY ATTACHMENT DURING CONSTRUCTION

No.	ITEM	ESI STD. DWG. No. OR BS. REF.	No. OFF	REMARKS
1	ANGLE CROSSARM	439533	2	
2	POST INSULATOR & CONDUCTOR CLAMP	ESI 43-93	3	
3	TENSION INSULATORS AND	ESI 43-93	6 SETS	
/	INSULATOR FITTINGS	BS 3288	6 SETS	
4	INSULATOR MOUNTING PLATE	439540	1	
5	CROSSARM SUPPORT CHANNEL	439534	4	
6	DANGER PLATE	439701	1	
7	WOOD POLE	435004	2	
8	BRACE BLOCK	439112	1	TYPE 2
9	'H'-POLE FOUNDATION BRACE	439545	2	
10	SQUARE FLAT WASHER	439604	3	
11	SQUARE CURVED WASHER	439605	2	
12	SHORT TYPE STRAPS	439541	2	
13	LONG TYPE STRAPS	439542	3	
14	CROSS BRACING	439543	4	
15	STAY ASSEMBLY	ESI 43-91		
16	BOLTS M20 X 60	ESI 43-96	39	
17	M24 X 60	"	4	
18	M20 X 375	"	4	
19	M20 X 450	"		AS REQUIRED
20	M20 X 530	"		" "
21	M20 X 750	"		" "
22	WASHER TAPER - 0	"	9	
23	EARTHING ATTACHMENT NUT	439554	1	

General arrangement angle/section 'H' pole

ESI Drawing No. 435010

68.6629

Typical H-Pole

Figure 3
(Sheet 2 of 2)