Appendix D Landscape and Habitat Strategy Plan and Landscape Designs.

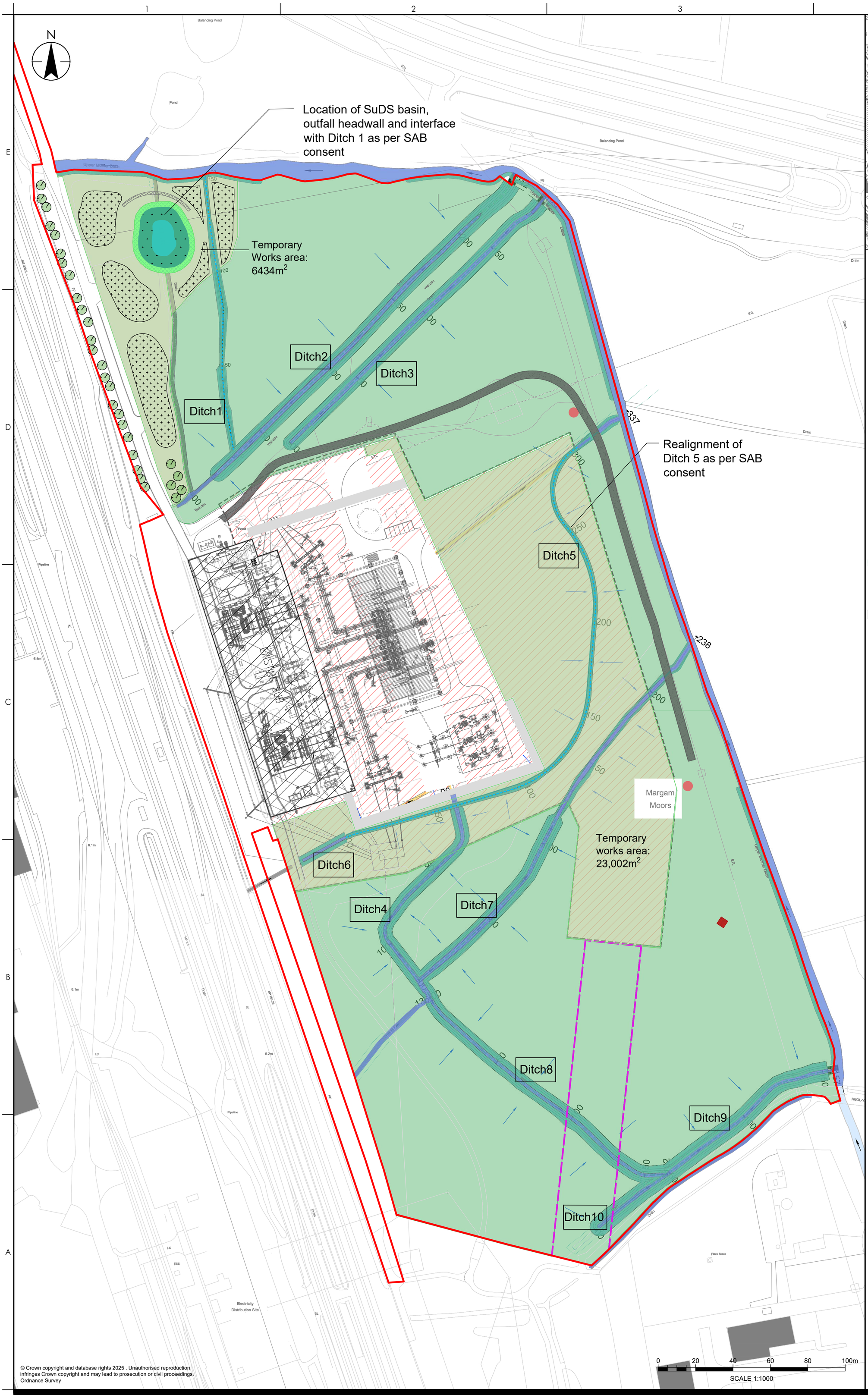

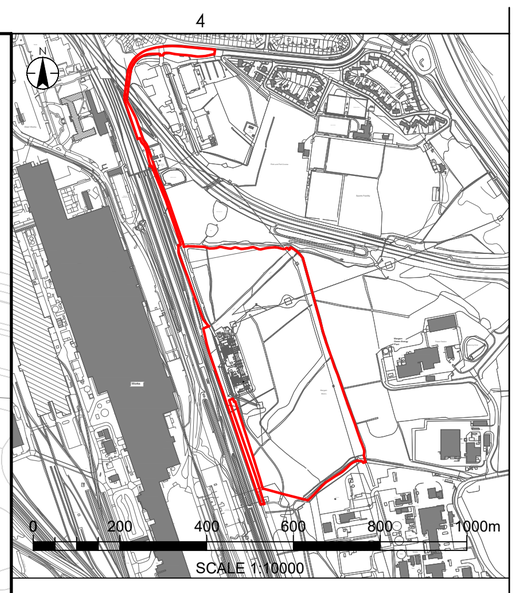

LEGEND:

- Site Boundary - Permitted Development Works
- Margam Substation Planning Application Boundary
- Tata Steel Planning Application Boundary
- Retained vegetation
- Individual Tree
- Temporary Works Area (Construction Swathe) (Seeded for natural regeneration with *Lolium multiflorum*, Westerwolds Rye Grass, 4g/m²)
- HDD cable route (retained vegetation)
- Aquatic mix in permanent water
- Marginal planting
- Grass Grid
- Riparian Woodland Mix
- Reinstatement/ Realigned Ditches
- Enhancement Ditches (1:3 slopes seeded for natural regeneration as per temporary works area)
- Retaining wall for flood defence
- Existing ditch
- Wildlife Tower (location TBC)
- Hibernacula Locations
- Gabion Basket Wall (location TBC)
- Existing Carriageway

NOTES:

1. All planting shown on the plans is subject to the location of services and utilities, and shall adhere to the following planting distances:
· Trees & shrubs 2m from fences.
· Trees at least 3m from telecoms cables.
· Trees at least 2m from underground electricity cables & shrubs at least 1m from underground electricity cables, including lighting cables.
· Where planting Is shown below or adjacent to overhead powerlines the contractor is to check with relevant statutory authorities for guidelines on appropriate planting distances. All new planting Is to be located in accordance with the relevant authorities' guidelines. * Trees at least 10m from a pylon & shrubs at least 5m from a pylon.
· Trees at least 3m & shrubs 2m from all drains & French drains. Trees & shrubs at least 2m from ditches on min. one side.
· Trees at least 5m from outfalls & shrubs at least 3m from outfalls.
· Trees at least 5m from any footpath & shrubs at least 2m from any footpath.
· Trees to be a minimum of 10m from ecological ponds.
· Trees & shrubs at least 2m from balancing pond Inlets and outlets.
· Only shrub species or groundcover species to be planted over underground culverts.
Notwithstanding any notes on these drawings, it is the contractor's responsibility to check for the presence of any underground and overhead utilities and services before undertaking any excavations or planting works. Where utilities and services mean that planting is unachievable, the contractor is to notify the Landscape Architect to agree alternative locations.
2. All soft areas shall be nurse grass seeded as set out in MAREXT-STN-XX-XXX-DR-LA-0001 & MAREXT-STN-XX-XXX-DR-LA-0002. Refer to the Peat Management Plan and the specification on MAREXT-STN-XX-XXX-DR-LA-0003 for subsoil and topsoil requirements and treatment of areas prior to planting.
3. All topsoil should be suitable reused topsoil from onsite. Reused topsoil should be stored appropriately during construction. Refer to the Peat Management Plan and Soils Management Plan
4. Site setting out of landscape areas and planting shall be to the acceptance of the Landscape Clerk of Works or Project Landscape Architect.
5. This drawing should be read in conjunction with drawings MAREXT-STN-XX-XXX-DR-LA-0001-4
6. All planting to be within the site boundary.
7. For full drainage design refer to MARPT-BHK-01-XX-RP-C-090001 Margam Drainage Report. Drainage design shown corresponds to SAB consent (reference S2025/0037) governing surface water including SuDS, Ditch1, and Ditch 5. Drainage design corresponds to OWC consent (reference FD 20250404) governing enhanced and reinstated ditches and is coordinated with the Water Vole Management 2488240-D07(04)

© Crown copyright and database rights 2025 . Unauthorised reproduction infringes Crown copyright and may lead to prosecution or civil proceedings. Ordnance Survey

Issued/Revision		By	Appd	YYYY.MM.DD
P03	Updated After Drainage Update	JRM	RW/SH	2025.11.07
P02	RLB Update	JRM	RW/SH	2025.08.05
P01	First Draft-	JRM/IM	RW/SH	2025.07.14

Notes:
The position of ditches and other features within this plan are approximate and have been transposed from plans submitted by RSK as part of the Water Vole Licence Application in 2024/2025.

Common plant species considered of value to water voles are provided, following those described in the Margam Substation Water Vole Licence Method Statement. To be discussed and agreed with NPT. The emerging drainage design will influence the final landscape detailed plan, to be conditioned.

Issue Status

S5 - FOR REVIEW AND ACCEPTANCE

This document is suitable only for the purpose noted above.
Use of this document for any other purpose is not permitted.

Stantec

Stantec UK Limited
10 Queen Square
Bristol
BS1 4NT
Tel. +44 1173 327 840
www.stantec.com/uk

Copyright Reserved
The Contractor shall verify and be responsible for all dimensions. DO NOT scale the drawing. Any errors or omissions shall be reported to Stantec without delay.
The Copyrights to all designs and drawings are the property of Stantec.
Reproduction or use for any purpose other than that authorised by Stantec is forbidden.

Client/Project Logo: nationalgrid

Project: Margam

Port Talbot

Dwn	Dsgn.	Chkd.	YYYY.MM.DD
JRM/IM	RW	RW/SH	2025.11.07

Title
FIGURE L9
LANDSCAPE PLAN

Issued/Revision | By | Appd | YYYY.MM.DD

Project No. 331201497

A1 Scale 1:1000

Revision P03

Drawing No. MAREXT-STN-XX-XXX-DR-LA-0001

Issued/Revision | By | Appd | YYYY.MM.DD

ORIGINAL SHEET - ISOA1 c:\users\rainfordmendez\stantec\margam port talbot - landscape and visual\drawings\landscape strategy plan\331201497 landscape strategy - margam and cable route pd works
Plotted: 07.11.2025 2025.11.07 11:00:11 AM By: Rainford Mendez, Jenifer

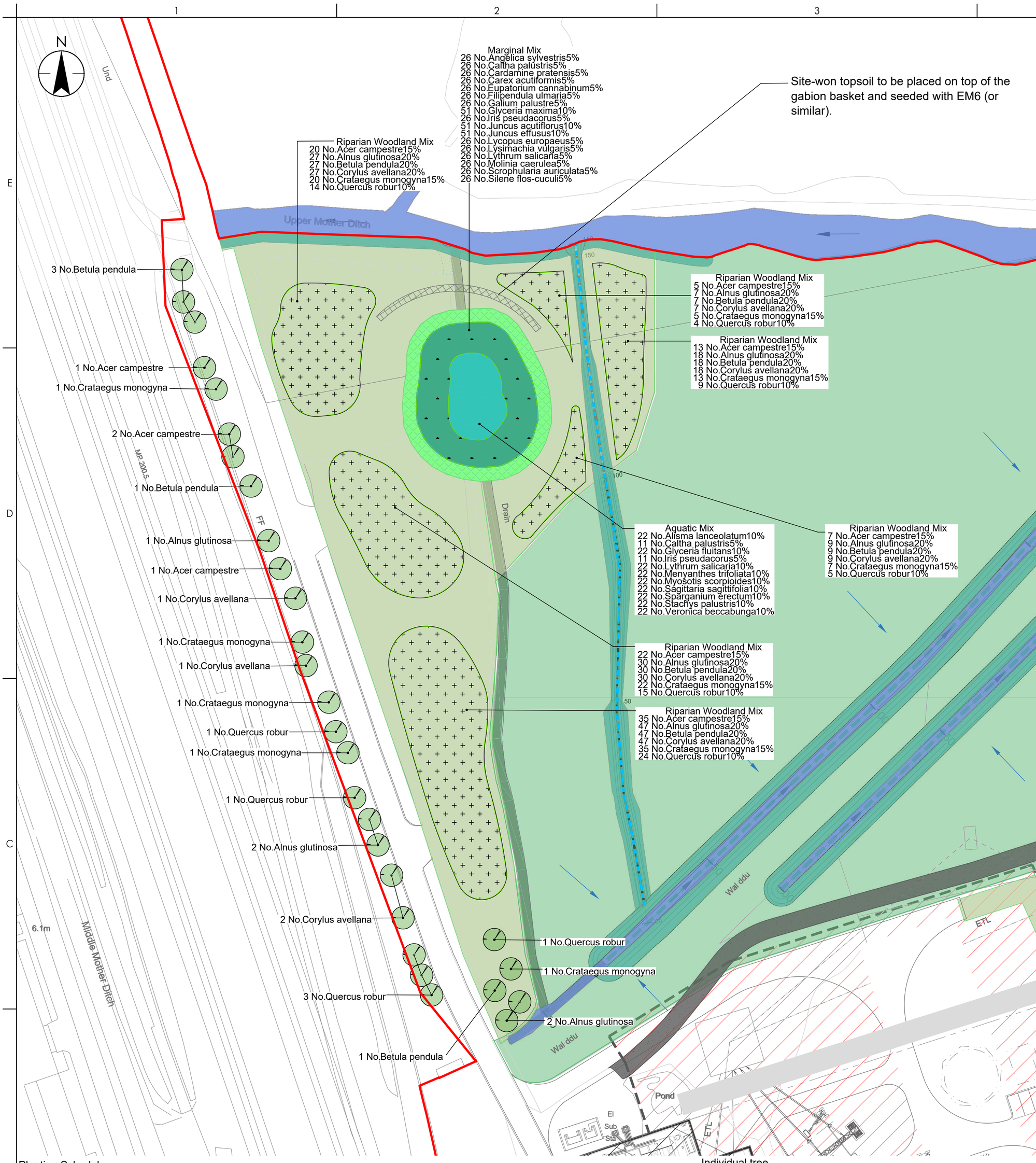

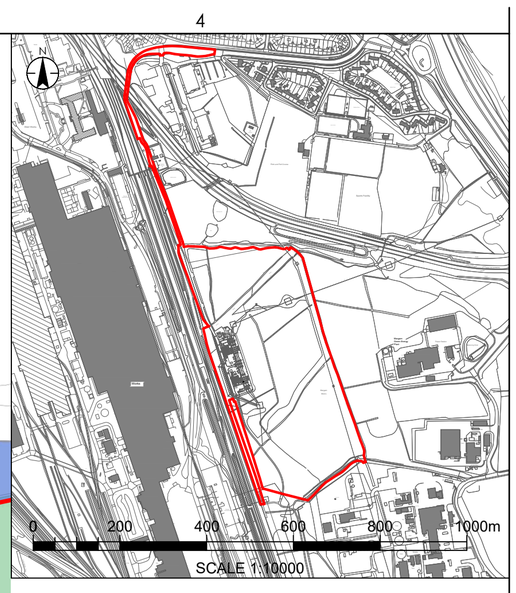

LEGEND:

- Site Boundary - Permitted Development Works
- Margam Substation Planning Application Boundary
- Tata Steel Planning Application Boundary
- Retained vegetation
- Individual Tree
- Temporary Works Area (Construction Swathe) (Seeded for natural regeneration with *Lolium multiflorum*, Westerwolds Rye Grass, 4g/m²)
- HDD cable route (retained vegetation)
- Aquatic mix in permanent water
- Marginal planting
- Grass Grid
- Riparian Woodland Mix
- Reinstatement/ Realigned Ditches
- Enhancement Ditches (1:3 slopes seeded for natural regeneration as per temporary works area)
- Retaining wall for flood defence
- Existing ditch
- Wildlife Tower (location TBC)
- Hibernacula Locations
- Gabion Basket Wall (location TBC)
- Existing Carriageway

Planting Schedule

Aquatic Mix

Number	Abbreviation	Species	Specification	Density	Pot Size	Percentage Contribution
22	Al la	Alisma lanceolatum	Full Pot: Sept to April planting: British Native-origin: C1/m²		0.5L	10%
11	Ca pa	Caltha palustris	Full Pot: Sept to April planting: British Native-origin: C1/m²		0.5L	5%
22	Gl fl	Glyceria fluitans	Full Pot: Sept to April planting: British Native-origin: C1/m²		0.5L	10%
11	Ir ps	Iris pseudacorus	Full Pot: Sept to April planting: British Native-origin: C1/m²		0.5L	5%
22	Ly sa	Lythrum salicaria	Full Pot: Sept to April planting: British Native-origin: C1/m²		0.5L	10%
22	Me tr	Menyanthes trifoliata	Full Pot: Sept to April planting: British Native-origin: C1/m²		0.5L	10%
22	My sc	Myosotis scorpioides	Full Pot: Sept to April planting: British Native-origin: C1/m²		0.5L	10%
22	Sa sa	Sagittaria sagittifolia	Full Pot: Sept to April planting: British Native-origin: C1/m²		0.5L	10%
22	Sp er	Sparganium erectum	Full Pot: Sept to April planting: British Native-origin: C1/m²		0.5L	10%
22	St pa	Stachys palustris	Full Pot: Sept to April planting: British Native-origin: C1/m²		0.5L	10%
22	Ve be	Veronica beccabunga	Full Pot: Sept to April planting: British Native-origin: C1/m²		0.5L	10%

Total :220

Marginal Mix

Number	Abbreviation	Species	Specification	Density	Pot Size	Percentage Contribution
26	An sy	Angelica sylvestris	Full Pot: Sept to April planting: British Native-origin: C1/m²		0.5L	5%
26	Ca pa	Caltha palustris	Full Pot: Sept to April planting: British Native-origin: C1/m²		0.5L	5%
26	Ca pr	Cardamine pratensis	Full Pot: Sept to April planting: British Native-origin: C1/m²		0.5L	5%
26	Ca ac	Carex acutiformis	Full Pot: Sept to April planting: British Native-origin: C1/m²		0.5L	5%
26	Eu ca	Eupatorium cannabinum	Full Pot: Sept to April planting: British Native-origin: C1/m²		0.5L	5%
26	Fi ul	Filipendula ulmaria	Full Pot: Sept to April planting: British Native-origin: C1/m²		0.5L	5%
26	Ga pa	Galium palustre	Full Pot: Sept to April planting: British Native-origin: C1/m²		0.5L	5%
51	Gl ma	Glyceria maxima	Full Pot: Sept to April planting: British Native-origin: C1/m²		0.5L	10%
26	Ir ps	Iris pseudacorus	Full Pot: Sept to April planting: British Native-origin: C1/m²		0.5L	5%
51	Ju ac	Juncus acutiflorus	Full Pot: Sept to April planting: British Native-origin: C1/m²		0.5L	10%
51	Ju ef	Juncus effusus	Full Pot: Sept to April planting: British Native-origin: C1/m²		0.5L	10%
26	Ly eu	Lycopus europaeus	Full Pot: Sept to April planting: British Native-origin: C1/m²		0.5L	5%
26	Ly vu	Lysimachia vulgaris	Full Pot: Sept to April planting: British Native-origin: C1/m²		0.5L	5%
26	Ly sa	Lythrum salicaria	Full Pot: Sept to April planting: British Native-origin: C1/m²		0.5L	5%
26	Mo ca	Molinia caerulea	Full Pot: Sept to April planting: British Native-origin: C1/m²		0.5L	5%
26	Sc au	Scrophularia auriculata	Full Pot: Sept to April planting: British Native-origin: C1/m²		0.5L	5%
26	Si fl	Silene flos-cuculi	Full Pot: Sept to April planting: British Native-origin: C1/m²		0.5L	5%

Total :517

Riparian Woodland Mix

Number	Abbreviation	Species	Specification	Density	Percentage Contribution
102	Ac ca	Acer campestre	1+1: Transplant - seed raised: B	2Ctr	15%
138	Al gl	Alnus glutinosa	1+1: Transplant - seed raised: B	2Ctr	20%
138	Be pe	Betula pendula	1+1: Transplant - seed raised: B	2Ctr	20%
138	Co av	Corylus avellana	1+2: Transplant - seed raised: Branched: 4 brks: B	2Ctr	20%
102	Cr mo	Crataegus monogyna	1+2: Transplant - seed raised: B	2Ctr	15%
71	Qu ro	Quercus robur	1+2: Transplant - seed raised: B	2Ctr	10%

Total :689

Individual tree

Number of Plants	Species	Height
5	Crataegus monogyna	100-125cm
5	Betula pendula	80-100cm
5	Alnus glutinosa	175-200cm
6	Quercus robur	175-200cm
4	Corylus avellana	80-100cm
4	Acer campestre	150-175cm

Total :29

Grass Nurse Seed: Lolium multiflorum, Westerwolds Rye Grass, sowing rate at 4g/m²

Total area: 29,436m²

Grass Grid

Total Area: 319m² to be seeded with Emorsgate EM1 Basic General Purpose Meadow Mixture

NOTES:

1. All planting shown on the plans is subject to the location of services and utilities, and shall adhere to the following planting distances:
· Trees & shrubs 2m from fences.
· Trees at least 3m from telecoms cables.
· Trees at least 2m from underground electricity cables & shrubs at least 1m from underground electricity cables, including lighting cables.
· Where planting is shown below or adjacent to overhead powerlines the contractor is to check with relevant statutory authorities for guidelines on appropriate planting distances. All new planting is to be located in accordance with the relevant authorities' guidelines. * Trees at least 10m from a pylon & shrubs at least 5m from a pylon.
· Trees at least 3m & shrubs 2m from all drains & French drains. Trees & shrubs at least 2m from ditches on min. one side.
· Trees at least 5m from outfalls & shrubs at least 3m from outfalls.
· Trees at least 5m from any footpath & shrubs at least 2m from any footpath.
· Trees to be a minimum of 10m from ecological ponds.
· Trees & shrubs at least 2m from balancing pond Inlets and outlets.
· Only shrub species or groundcover species to be planted over underground culverts.
Notwithstanding any notes on these drawings, it is the contractor's responsibility to check for the presence of any underground and overhead utilities and services before undertaking any excavations or planting works. Where utilities and services mean that planting is unachievable, the contractor is to notify the Landscape Architect to agree alternative locations.
2. All soft areas shall be nurse grass seeded as set out in MAREXT-STN-XX-XXX-DR-LA-0001 & MAREXT-STN-XX-XXX-DR-LA-0002. Refer to the Peat Management Plan and the specification on MAREXT-STN-XX-XXX-DR-LA-0003 for subsoil and topsoil requirements and treatment of areas prior to planting.
3. All topsoil should be suitable reused topsoil from onsite. Reused topsoil should be stored appropriately during construction. Refer to the Peat Management Plan and Soils Management Plan
4. Site setting out of landscape areas and planting shall be to the acceptance of the Landscape Clerk of Works or Project Landscape Architect.
5. This drawing should be read in conjunction with drawings MAREXT-STN-XX-XXX-DR-LA-0001-4
6. All planting to be within the site boundary.
7. For full drainage design refer to MARPT-BHK-01-XX-RP-C-090001 Margam Drainage Report. Drainage design shown corresponds to SAB consent (reference S2025/0037) governing surface water including SuDS, Ditch1, and Ditch 5. Drainage design corresponds to OWC consent (reference FD 20250404) governing enhanced and reinstated ditches and is coordinated with the Water Vole Management 2488240-D07(04)

© Crown copyright and database rights 2025 . Unauthorised reproduction infringes Crown copyright and may lead to prosecution or civil proceedings. Ordnance Survey

Issued/Revision		By	Appd	YYYY.MM.DD
P03	Updated After Drainage Update	JRM	RW/SH	2025.11.07
P02	RLB Update	JRM	RW/SH	2025.08.05
P01	First Draft-	JRM/IM	RW/SH	2025.07.14

Notes:

The position of ditches and other features within this plan are approximate and have been transposed from plans submitted by RSK as part of the Water Vole Licence Application in 2024/2025.

Common plant species considered of value to water voles are provided, following those described in the Margam Substation Water Vole Licence Method Statement. . To be discussed and agreed with NPT. The emerging drainage design will influence the final landscape detailed plan, to be conditioned.

Issue Status

S5 - FOR REVIEW AND ACCEPTANCE

This document is suitable only for the purpose noted above. Use of this document for any other purpose is not permitted.

Stantec
Stantec UK Limited
10 Queen Square
Bristol
BS1 4NT
Tel. +44 1173 327 840
www.stantec.com/uk

Copyright Reserved
The Contractor shall verify and be responsible for all dimensions. DO NOT scale the drawing. Any errors or omissions shall be reported to Stantec without delay.
The Copyrights to all designs and drawings are the property of Stantec.
Reproduction or use for any purpose other than that authorised by Stantec is forbidden.

Client/Project Logo: nationalgrid

Project: Margam

Port Talbot

Dwn	Dsgn.	Chkd.	YYYY.MM.DD
JRM/IM	RW	RW/SH	2025.11.07

Title

FIGURE L7 LANDSCAPE MITIGATION AREA PLANTING PLAN

Project No. 331201497

A1 Scale 1:500

Revision P03

Drawing No. MAREXT-STN-XX-XXX-DR-LA-0002

ORIGINAL SHEET - ISO A1 c:\users\jrainfordmendez\stantec\margam port talbot - landscape and visual\drawings\landscape strategy plan\331201497 landscape strategy - margam and cable route pd works
Plotted: 07.11.2025 2025.11.07 11:13:08 AM By: Rainford Mendez, Jenifer

Indicative Sections

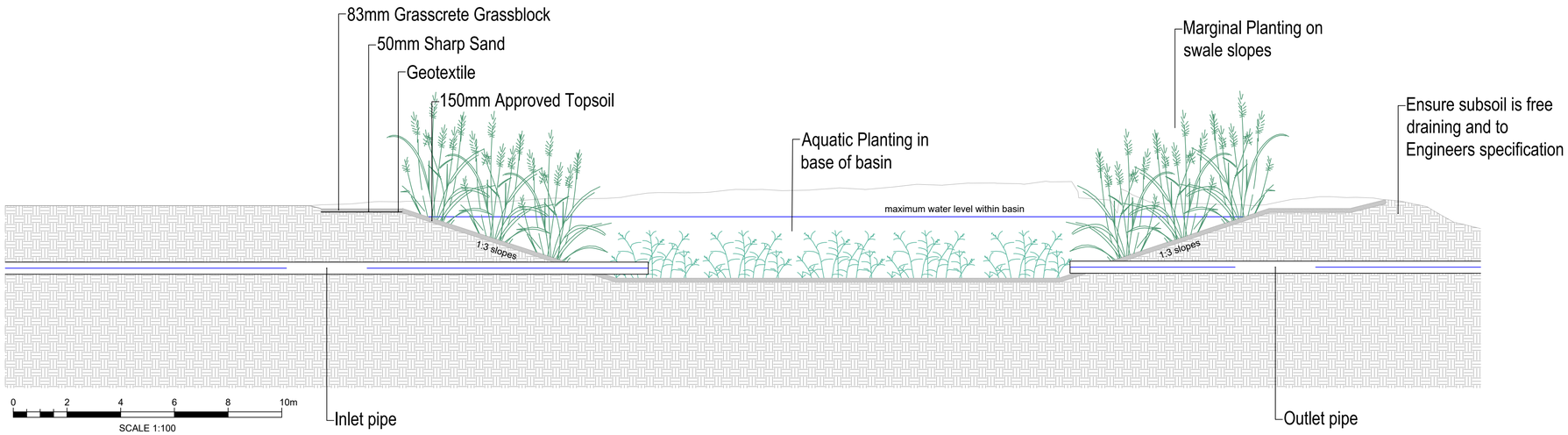

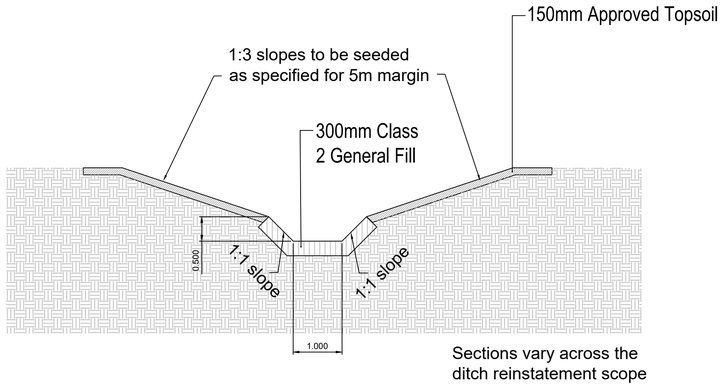

Reinstated/Diverted Ditch (not to scale)

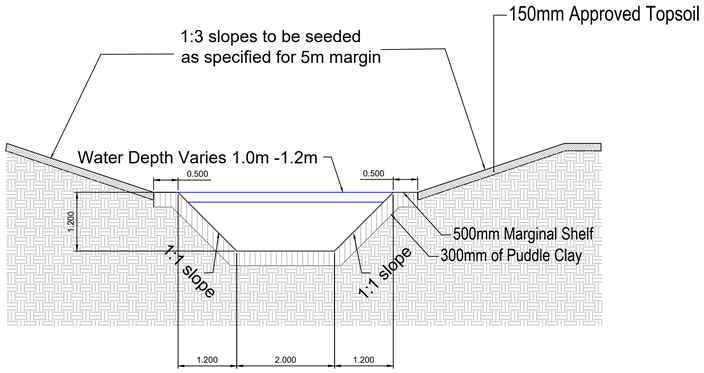

Enhanced Ditch (not to scale)

Outline Specification

General Implementation Notes

Refer to the Arboriculturalist's information for details of existing vegetation to be retained and protection measures.
Drawing to be read in conjunction with Ecologist's information and any prescriptions therein.
Vegetation removal should be undertaken outside of bird nesting season, which is March to August inclusive, unless supervised by a suitably experienced ecologist.
All work is to be undertaken in accordance with best practice, relevant British Standards and manufacturer's guidance, where applicable.
Products and materials specified are to be used or similar and approved.
All planting to be undertaken in accordance with BS4428 Code of Practice for General Landscape Operations.
Preparation, planting and mulching materials must be free from toxins, pathogens or other extraneous substances harmful to plant, animal or human life.
Use only machinery and tools suitable for the site conditions and the work to be carried out.

Times of Year for Planting

Follow the provisions set out in the LMMP, but generally:
Deciduous trees and shrubs: Late October to late March.
Dried bulbs, corms and tubers: September/ October.
Planting is to be carried out in suitable weather. Stock shall not be planted in conditions of drought, hot sunshine, frost, frozen ground, strong wind or heavy rainfall that renders the soil waterlogged or in sticky condition. Wherever possible, planting should take place when the weather is dull and the ground is moist and workable.
All plants to be protected from wind exposure at all times.

Site Clearance

Areas to be planted shall be free from old foundations, concrete bases and other similar obstructions. All coarse rubble, stone, and artifacts greater than 75mm in diameter exposed by ripping operations shall be removed to a licensed facility.
In areas to be planted, all grass and other herbaceous vegetation shall be cut to a height of between 50 mm and 75 mm and the arisings removed.

Subsoil

Subsoil grading of the site shall leave landscape areas with smooth flowing contours to achieve the specified finished levels when topsoiled. Prior to topsoiling, subsoil formation should be ripped and loosened to a minimum depth of 450mm except for areas with Root Protection Areas as shown on the Arboriculturalist's drawings.

Topsoil

All topsoil is to be reused from within the site to preserve the existing seed bed.
Topsoil must be free from weeds and roots, clay lumps, non-soil materials, brick or other building materials, foreign matter and chemical contamination. Topsoil should be spread evenly over areas to be seeded and planted. Minimum topsoil depths after settlement shall be 300mm.
Topsoil shall be spread in layers not exceeding 150mm and firm each layer before spreading the next. At the time of laying, both material and weather should be reasonably dry. Soil levels should be married in with existing soil levels.

Cultivation

Cultivate the soil of all areas prior to seeding and planting. A few days before planting, but in suitably dry weather and ground conditions, cultivate top 300mm of all tree planting areas, using suitable plant to loosen, aerate and break up the soil into particles of 2-8mm. Leave surface regular and even, with levels as required. Remove weeds, perennial weed roots and undesirable material brought to the surface including stones and clods larger than 50mm in any dimension, roots, tufts of grass and foreign matter. Final cultivation prior to seeding topsoil shall be brought to a fine tilth by approved mechanical means or by hand raking.

Weed Treatment

The contractor shall prevent weeds from seeding and perennial weeds from becoming established, by applying a suitable herbicide (non-residual), allowing a period of time to elapse as recommended by manufacturer before cultivation.
Specification of Plant Material
All plants are to be local provenance wherever possible, from a local supplier and from sources with soil and climatic conditions similar to those prevailing on site.
All plants to be healthy, hardened-off and with good fibrous root systems and to comply with the requirements of BS3936 Specification for Nursery Stock.

All plant material to be supplied in accordance with the HTA National Plant Specification.
The code for Plant Handling published by C.P.S.E. shall be strictly adhered to. Substitutions to plant material will only be acceptable if approved by the Landscape Architect.

Planting Shrubs and Herbaceous Material

All individual plants shall be notch planted, making a vertical 'I', 'L', 'T' or 'H' notch, to accommodate fill depth of roots. Notch should be closed following planting, using root collar at ground level, and soil should be firmed.
Planting of species should be undertaken at 0.5/m2, planted in random groups of no less than 3 and no more than 7 of the same species, ensuring that no groups are aligned in any one direction.
Larger specimens, for example more than 1m in height, to be pit-planted with with sufficiently large pit to accommodate root system without bending roots (minimum size of 150mm wider than roots when fully spread and 200mm deep). The base of each pit to be broken up to 150mm with all topsoil thoroughly broken up from the carefully excavated material, and any soil additives and/or ameliorants added in accordance with best practice, prior to backfilling.
Trees shall be secured in position using round timber stakes (top diameter of 50-75 mm), peeled of bark, straight in length and free of snags, pests and diseases, with adjustable 25mm tree ties, made of black PVC or reinforced rubber
Stakes for all trees shall be firmly driven and positioned into the tree planting pit before planting to a minimum depth of 300 mm below the bottom of the pit.
The stake shall be positioned off centre on the prevailing windward side of the tree as near to the tree as possible but shall not interfere with the free movement of the branches and shall cause no rubbing.

General Watering

All plants to be soaked in water for several hours prior to planting, to be well watered in and as necessary to ensure healthy establishment.
Use a fine rose where appropriate to avoid damage or displacing plants or soil.
Water as necessary to ensure establishment and continued thriving of planting.
Water Restrictions: If water supply is or is likely to be restricted by emergency legislation, do not carry out planting until instructed. If planting has been carried out, obtain instructions on watering.

© Crown copyright and database rights ???? . Unauthorised reproduction infringes Crown copyright and may lead to prosecution or civil proceedings. Ordnance Survey ????????

Stantec
Stantec UK Limited
PICK YOUR OFFICE
Tel.
www.stantec.com/uk

Copyright Reserved
The Contractor shall verify and be responsible for all dimensions. DO NOT scale the drawing. Any errors or omissions shall be reported to Stantec without delay.
The Copyrights to all designs and drawings are the property of Stantec. Reproduction or use for any purpose other than that authorised by Stantec is forbidden.

Notes

UTILITIES NOTE: The position of any existing public or private sewers, utility services, plant or apparatus shown on this drawing is believed to be correct, but no warranty to this is expressed or implied. Other such plant or apparatus may also be present but not shown. The Contractor is therefore advised to undertake their own investigation where the presence of any existing sewers, services, plant or apparatus may affect their operations.
1. All planting shown on the plans is subject to the location of services and utilities, and shall adhere to the following planting distances:
· Trees & shrubs 2m from fences.
· Trees at least 3m from telecoms cables.
· Trees at least 2m from underground electricity cables & shrubs at least 1m from underground electricity cables, including lighting cables.
· Where planting Is shown below or adjacent to overhead powerlines the contractor is to check with relevant statutory authorities for guidelines on appropriate planting
distances. All new planting Is to be located in accordance with the relevant authorities' guidelines. * Trees at least 10m from a pylon & shrubs at least 5m from a pylon.
· Trees at least 3m & shrubs 2m from all drains & French drains. Trees & shrubs at least 2m from ditches on min. one side.
· Trees at least 5m from outfalls & shrubs at least 3m from outfalls.
· Trees at least 5m from any footpath & shrubs at least 2m from any footpath.
· Trees to be a minimum of 10m from ecological ponds.
· Trees & shrubs at least 2m from balancing pond Inlets and outlets.
· Only shrub species or groundcover species to be planted over underground culverts.
Notwithstanding any notes on these drawings, it is the contractor's responsibility to check for the presence of any underground and overhead utilities and services before
undertaking any excavations or planting works. Where utilities and services mean that planting is unachievable, the contractor is to notify the Landscape Architect to agree
alternative locations.
2. All soft areas shall be nurse grass seeded as set out in MAREXT-STN-XX-XXX-DR-LA-0001 & MAREXT-STN-XX-XXX-DR-LA-0002. Refer to the Peat Management Plan and the specification below for subsoil and topsoil requirements and treatment of areas prior to planting.
3. All topsoil should be suitable reused topsoil from onsite. Reused topsoil should be stored appropriately during construction. Refer to the Peat Management Plan
4. Site setting out of landscape areas and planting shall be to the acceptance of the Landscape Clerk of Works or Project Landscape Architect.
5. This drawing should be read in conjunction with drawings MAREXT-STN-XX-XXX-DR-LA-0001 & MAREXT-STN-XX-XXX-DR-LA-0002
6. All planting to be within the site boundary.
7. For full drainage design refer to MARPT-BHK-01-XX-RP-C-090001 Margam Drainage Report. Drainage design shown corresponds to SAB consent (reference S2025/0037) governing surface water including SuDS, Ditch1, and Ditch 5. Drainage design corresponds to OWC consent (reference FD 20250404) governing enhanced and reinstated ditches and is coordinated with the Water Vole Management 2488240-D07(04)

Issued/Revision

	By	Appd	YYYY.MM.DD
P02 Updated After Drainage Update	JRM	SH	2025.11.07
P01 FIRST ISSUE	ND	SH	2025.07.14

	Dwn.	Dsgn.	Chkd.	YYYY.MM.DD
	KM	KM	RW	2025.07.14

Issue Status

S5 - FOR REVIEW AND ACCEPTANCE

This document is suitable only for the purpose noted above.
Use of this document for any other purpose is not permitted.

Client/Project Logo

nationalgrid

Client/Project
National Grid

Margam, Port Talbot

Title
Margam SuDS Indicative Sections and Sepcification

Project No. 331201497
A1 Scale 1:100
Revision P02
Drawing No. MAREXT-STN-XX-XXX-DR-LA-0003

Plotted:07.11.2025,2025.11.07 11:17:21 AM By: Rodrigo Mendoz, Jenifer
DWG No.SHEET SIZE: A1 C:\users\jenifer.mendoz\documents\margam port talbot - landscape and visual\drawings\landscape strategy plan\331201497-landscape strategy - pond plan sections

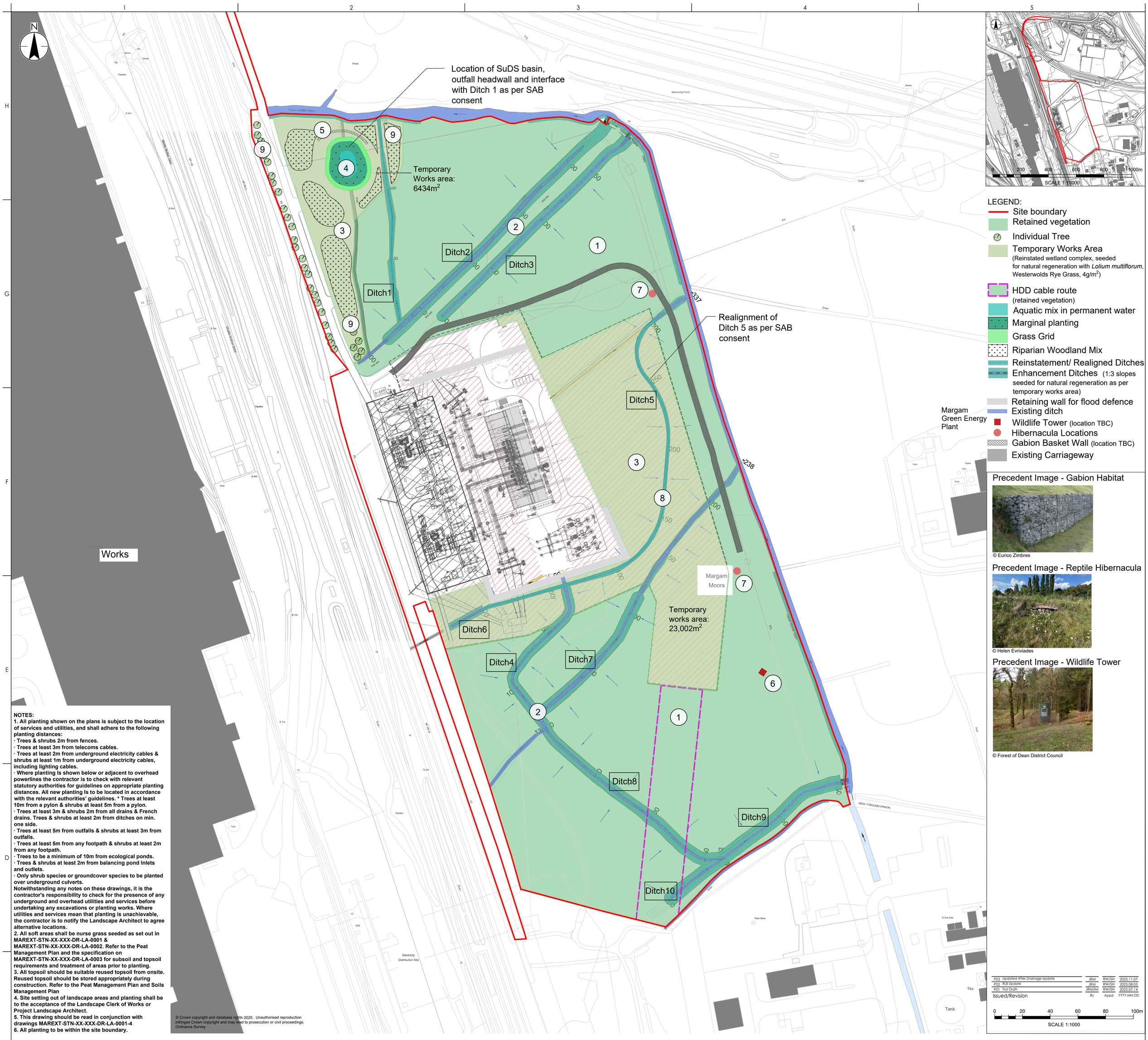

NOTES:
1. All planting shown on the plans is subject to the location of services and utilities, and shall adhere to the following planting distances:
· Trees & shrubs 2m from fences.
· Trees at least 3m from telecoms cables.
· Trees at least 2m from underground electricity cables & shrubs at least 1m from underground electricity cables, including lighting cables.
· Where planting Is shown below or adjacent to overhead powerlines the contractor is to check with relevant statutory authorities for guidelines on appropriate planting distances. All new planting Is to be located in accordance with the relevant authorities' guidelines. * Trees at least 10m from a pylon & shrubs at least 5m from a pylon.
· Trees at least 3m & shrubs 2m from all drains & French drains. Trees & shrubs at least 2m from ditches on min. one side.
· Trees at least 5m from outfalls & shrubs at least 3m from outfalls.
· Trees at least 5m from any footpath & shrubs at least 2m from any footpath.
· Trees to be a minimum of 10m from ecological ponds.
· Trees & shrubs at least 2m from balancing pond Inlets and outlets.
· Only shrub species or groundcover species to be planted over underground culverts.
Notwithstanding any notes on these drawings, it is the contractor's responsibility to check for the presence of any underground and overhead utilities and services before undertaking any excavations or planting works. Where utilities and services mean that planting is unachievable, the contractor is to notify the Landscape Architect to agree alternative locations.
2. All soft areas shall be nurse grass seeded as set out in MAREXT-STN-XX-XXX-DR-LA-0001 & MAREXT-STN-XX-XXX-DR-LA-0002. Refer to the Peat Management Plan and the specification on MAREXT-STN-XX-XXX-DR-LA-0003 for subsoil and topsoil requirements and treatment of areas prior to planting.
3. All topsoil should be suitable reused topsoil from onsite. Reused topsoil should be stored appropriately during construction. Refer to the Peat Management Plan and Soils Management Plan
4. Site setting out of landscape areas and planting shall be to the acceptance of the Landscape Clerk of Works or Project Landscape Architect.
5. This drawing should be read in conjunction with drawings MAREXT-STN-XX-XXX-DR-LA-0001-4
6. All planting to be within the site boundary.

P03	Updated After Drainage Update	JRM	RW/SH	2025.11.07
P02	RLB Update	JRM	RW/SH	2025.08.05
P01	First Draft	JRM/IM	RW/SH	2025.07.14
Issued/Revision		By	Appd	YYYY.MM.DD

KEY:

1) Retained Vegetation: Works areas have been minimised to reduce permanent and temporary impacts on retained areas of vegetation. The retained areas of vegetation will be managed and monitored to contribute to the delivery of Net Biodiversity Benefits for the scheme, whilst being mindful of National Grids ongoing operational requirements.

2) Managed vegetation at ditches: Across the retained areas of vegetation, habitat creation and enhancement works will take place alongside the ditches. Whilst this is primarily targeted to benefit water vole (see Margam Substation Water Vole Licence Method Statement), it is anticipated that the habitat creation and enhancement works proposed for the ditches will also overall benefit the habitat diversity within the site through allowing the ditch network to function and drain the site more effectively than currently. It is considered that this will enable the drier and more floristic marshy grassland to come back and reduce the dominance of the reed and large-sedge dominated areas of the existing site. Management of ditches to include the following measures:

- removal of encroaching scrub from banks and 5 m back from the watercourse
- removal of shrubs from banks and up to 5 m back, and removal of stumps
- retention of individual mature trees, to cover less than 10% of the ditch
- where present and where appropriate, the pollarding of more mature willow
- dredging of water channel up to a depth of 1.2a
- where needed, the planting of banks and marginal shelf with species of value to water voles as per the Marginal Mix detailed on drawing MAREXT-STN-XX-XXX-DR-LA-0002

3) Natural regeneration in construction swathe areas: Following construction, areas of land compacted by track matting, vehicles and working platforms would undergo subsoil aeration initially followed by sowing of nurse grass seed such as Westerwolds Ryegrass *Lolilium mulitflorum* or as agreed with Neath Port Talbot Council to encourage early establishment of natural regeneration processes. These areas would be allowed to succeed naturally with minimal management, thereby creating an open mosaic habitat, assimilating within the existing Site habitat over time.

4) SuDS with marginal planting: SuDS area (to be established following removal of the welfare compound) with suitable marginal planting to encourage use by aquatic wildlife and potentially oxygenate standing water.

5) Gabion basket CO_2 gardens: Multi-functional refugia to be created through the re-use of waste materials (appropriately screened slag) provided by Tata Steel to be used within 1m3/ gabion baskets - mesh size to be determined by size of slag rocks/stones provided by Tata for the fill along with incorporation of logs/cinder "bee" bricks etc. The gabion baskets are to be topped with site-won topsoil (reused) and floristic grassland mix (e.g. Emorsgate EM6, or similar). The detailed design and locations for these features are to be agreed with the Contractor and with Neath Port Talbot Council but options being considered include: along the access road to the north within National Grid land ownership and in areas of higher ground within the site (e.g. around the proposed SUDS pond) to avoid waterlogging.

6) Wildlife Tower: 1 no. appropriate for this site, Location is approximate and to be confirmed, along with the design type, to be agreed with NPT. The stand-alone wildlife towers could provide resource for bats (e.g. bat boxes on a pole to provide suitable roosting provision for crevice-dwelling bat species which are currently the most encountered species recorded during activity surveys; there is no current roosting opportunities for this species group within the National Grid land) Pole Mounted Roost Maternity Single/Double Bat Box or Eco Rocket Bat Box | Wildlife Services. Alternatively, the wildlife tower could comprise a multi-functional tower incorporating features for nesting birds and/or roosting bats in addition to features for invertebrates (e.g. How to build a wildlife tower - The Barn Owl Trust).

7) Reptile & Amphibian Hibernacula:
Locations of the reptile hibernacula have been provided by National Grid's contractor. The reptile hibernacula have been constructed prior to "Early Works" undertaken under Permitted Development. The Early Works Reptile Mitigation Strategy (RSK, 2025) described the reptile hibernaculum as follows: "to comprise a mix of stone and logs, topped with soil and turf (or be seeded). Each should comprise minimum size: 4 m (length) x 2 m (width) x 1.5 m (height) x up to 0.5 m (below-ground), and should be oriented east-west, to create a south-facing bank and constructed above-ground to avoid potential flooding.

8) Indicative Ditch Diversion: the permanent footprint of the proposed substation affects existing ditches. The ditches will be realigned and reinstated to include:

- creation of permanent water channel to a depth of 1.2 m and 2 to 3 m wide (as appropriate to the levels within the Site)
- profiling of banks to 45 degree angle
- planting of banks and marginal shelf with species of value to water voles

Indicative species list of planting suitable for SuDS / ditches:
(As described in the Margam Substation Water Vole Licence Method Statement – detailed specification to be agreed with relevant parties – see Notes)

Reeds; *Glyceria maxima* (Reed Sweet-grass), *Glyceria fluitans* (Floating Sweet-grass)

Aquatic plants; *Sagittaria sagittifolia* (Arrowhead), *Alisma plantago-aquatica* (Water-plantain), *Ceratophyllum demersum* (Hornwort), *Myriophyllum spicatum* (Spiked Water-milfoil), *Menyanthes trifoliata* (Bogbean), *Schoenoplectus lacustris* (Common Club-rush), Water-cress), *Caltha palustris* (Marsh- marigold)

Marginal plants; *Iris pseudacorus* (Yellow Iris), *Caltha palustris* (Marsh-marigold), *Cardamine pratensis* (Cuckooflower), *Filipendula ulmaria* (Meadowsweet), *Comarum palustre* (Marsh cinquefoil), *Lythrum salicaria* (Purple-loosestrife), *Apium nodiflorum* (Fool's Water-cress), *Angelica sylvestris* (Wild Angelica), *Galium palustre* (Common Marsh-bedstraw), *Myosotis scorpioides* (Water Forget-me-not), *Mentha aquatica* (Water Mint), *Veronica beccabunga* (Brooklime), *Valeriana officinale* (Common Valerian), *Lycopus europaeus* (Gypsywort)

Bankside rushes & sedge; *Juncus effusus* (Soft-rush), *Juncus conglomeratus* (Compact Rush), *Juncus acutiflorus* (Sharp-flowered Rush), *Carex acutiformis* (Lesser Pond-sedge).

9) Tree Planting: It has been agreed with Neath Port Talbot Council that the majority of the Site is not suitable for tree planting. This is because the majority of the Site lies within the Junction 38 Wetland Complex SINC and the area of the SINC within the Site is designated for its wetland and grassland habitats which who's interest has the potential to be adversely impacted by tree planting. The tree planting provided within the site will therefore be provided in suitable locations outside of the SINC boundary. Indicative locations are provided, subject to agreement with NPT. These are located within the north western corner of the site, where the area will be resetablished post-constructiona nd surrounding the SuDS pond.

Indicative species list of planting suitable for planting:
Alnus glutinosa (Alder), *Quercus robur* (Common Oak), *Acer campestre* (Field Maple), *Corylus avellana* (Hazel), *Crataegus monogyna* (Hawthorn), *Betula pendula* (Silver birch).

Notes:
The position of ditches and other features within this plan are approximate and have been transposed from plans submitted by RSK as part of the Water Vole Licence Application in 2024/2025.

Common plant species considered of value to water voles are provided, following those described in the Margam Substation Water Vole Licence Method Statement. As stated in that document, not all species listed will be suitable or acceptable at all locations/sites but native species from local provenance suitable to the geographic, hydrological, shade and soil factors should be chosen, in addition to those plant species which provide suitable food and cover for water vole. To be discussed and agreed with NPT. The emerging drainage design will influence the final landscape detailed plan, to be conditioned.

Issue Status
S5 - FOR REVIEW AND ACCEPTANCE
This document is suitable only for the purpose noted above. Use of this document for any other purpose is not permitted.

Stantec
Stantec UK Limited
10 Queen Square
Bristol
BS1 4NT
Tel. +44 1173 327 840
www.stantec.com/uk

Copyright Reserved
The Contractor shall verify and be responsible for all dimensions. DO NOT scale the drawing. Any errors or omissions shall be reported to Stantec without delay.
The Copyrights to all designs and drawings are the property of Stantec.
Reproduction or use for any purpose other than that authorised by Stantec is forbidden.

Client/Project Logo: nationalgrid
Project: Margam
Port Talbot

IM/JRM	RW	SH	2025.07.14
Dwn	Dsgn.	Chkd.	YYYY.MM.DD

Title
FIGURE L8
LANDSCAPE AND HABITAT STRATEGY PLAN

Project No. 331201497
A0 Scale 1:1000
Revision P03
Drawing No. MAREXT-STN-XX-XXX-DR-LA-0004

ORIGINAL SHEET - ISO-A0 c:\users\rainfordmendez\stantec\margam port talbot - landscape and visual\drawings\landscape strategy plan\331201497 landscape strategy - margam and cable route pd works
Plotted: 07.11.2025 2025.11.07 11:26:05 AM By: Rainford Mendez, Jenifer

Appendix E Illustrative Design: Wildlife Tower and Gabion Baskets

Illustrative Sketch: Gabion Basket for Wildlife. Dimensions: 1m^3

Stantec

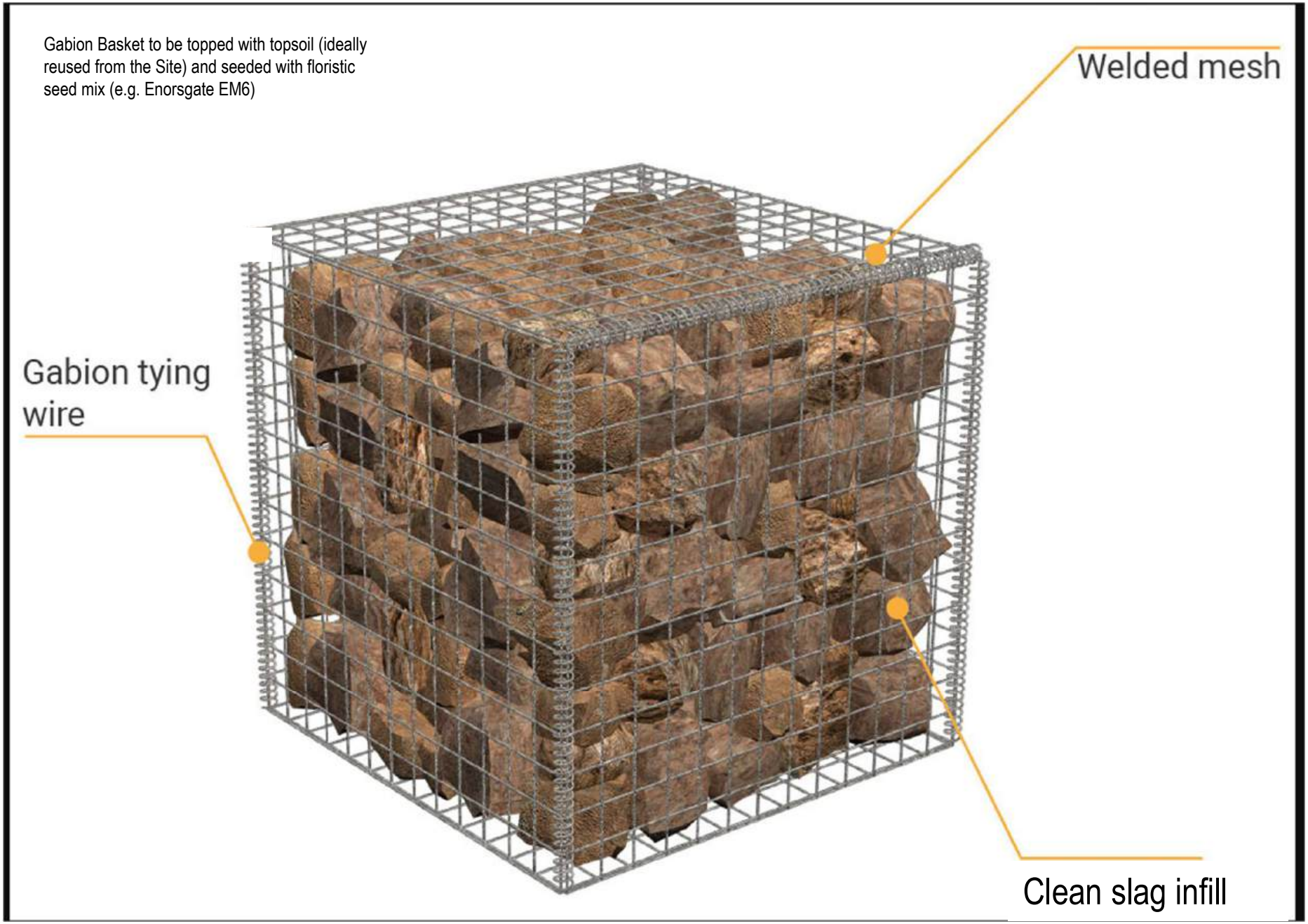

Building a new Lesser Horseshoe Bat Night Roost

Case Study - *How we did it*

Lesser Horseshoe Bat

Background A major education led regeneration programme is underway in Cinderford, Gloucestershire. Programme implementation requires the building of two new replacement Lesser Horseshoe Bat Day Roosts and two Night Roosts. The focus of this case study is about the practical experience of designing and building two bat night roosts (A case study in relation to the day roost is also available). We hope by providing this information freely it will be of assistance for similar projects in the future. For further information contact details are provided at the end of the case study or visit the regeneration pages on the Council website (www.fdean.gov.uk).

Introduction Planning permission for a new mixed use development required the building of two Lesser Horseshoe Bat (LHB) night roosts. The purpose of the night roosts were to extend feeding ranges and provide additional bat colony resilience by providing additional occasional shelter/feeding perches.

Design and Siting Radio tracking data from an existing main roost site, habitat suitability assessments together with future Forestry Plans were used to select locations which were considered likely to be the most useful to the bats and reduced chance of substantial disturbance. **The 'Lesser Horseshoe Conservation Handbook'** (2008) Schofield, H. provides excellent background to LHB ecology, roost requirements and roost design features. The handbook illustrates a 'shed' like night roost design however bearing in mind the open access nature of the site, preference for low maintenance and a permanent structure it was decided an alternative design was needed in this case. The handbook provided good guidance of the requirements and features for a night roost.

In addition to the ecological requirements we were keen that that the structures should be as simple as possible, easily replicable and minimise on site construction time by prefabrication.

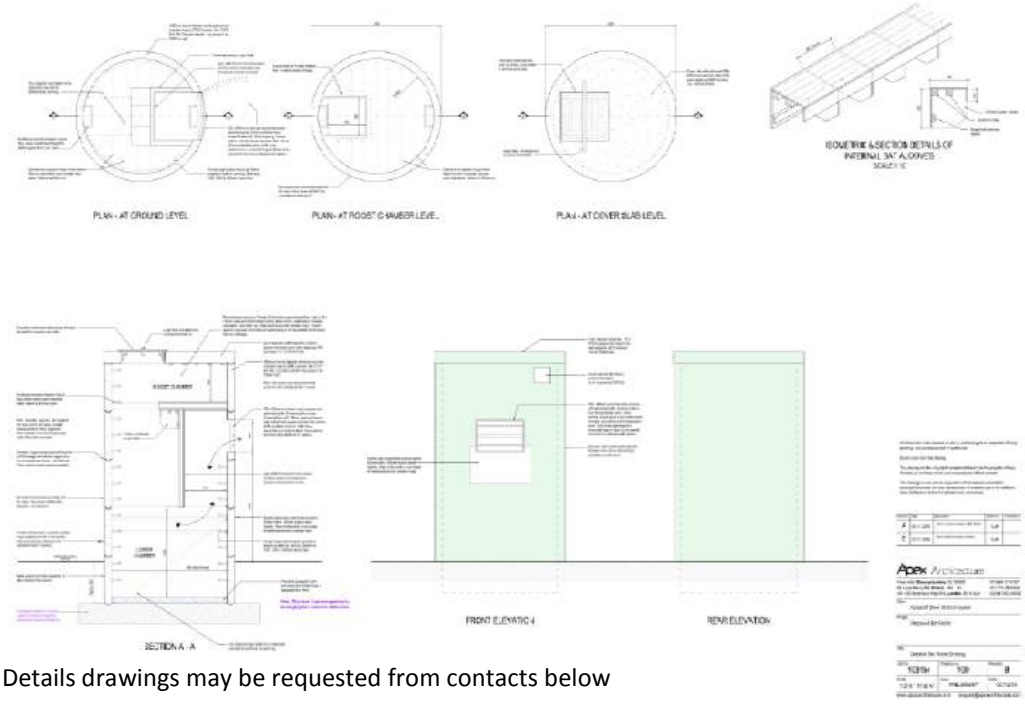

Our final design was based on pre-cast concrete sewer rings, with an internal baffle and upper chamber. An idea being that these could be prefabricated off site and transported and easily assembled on site.

Details drawings may be requested from contacts below

Construction The compacted hardcore base construction of the two sites was undertaken over two days in February 2017 with the construction of the two night roosts taking about a week later that month. Planting around the roost was completed by the end of March 2017. The total cost of construction and landscaping of the two roosts was in the region of £13,500.

Monitoring Static bat recorders (loggers) were placed inside the night roosts for 17 consecutive nights in July 2018. Of the 6700 sound files recorded in the period half were identified as bat passes. Whilst the recorders will have undoubtedly recorded bat passes nearby, but outside of the roost, the level of recording clearly indicates the structures were being regularly used.

Key things we might look at differently next time…..

Water tightness
We soon found that the manhole cover on the top (for future access) was not water tight and needed sealing. In hindsight some form of fabricated hatch cover may well be better.

Prefabrication
The contractor chose not to do any internal fabrication off site which led to a longer on site construction time as they wanted to avoid damage in transit. It remains an option for future projects.

Appearance
Landscaping with native climbing and thorned plants has been undertaken and does require some annual maintenance and securing to the structure. Vertical timber cladding was considered as a measure to 'soften' the impact of the structure, but not considered necessary for these locations.

Internal features for other species
The focus for the roosts was for Lesser Horseshoe Bats, however a greater range of features could have been added for crevice favouring bat species.

Costs
There was a certain amount of developmental and risk cost within the overall budget; as a result of trying something new. Overall it is considered costs could potentially be reduced dependant on access and practical experience.

Main Contractors

Apex Architecture
www.apexarchitecture.com

ERNEST HEAL & Sons Ltd
CONSTRUCTION Est. 1929

AEWC Ltd
Animal Ecology & Wildlife Consultants

Further Contacts: Alastair Chapman , Sustainability Team Leader, Forest of Dean District Council
alastair.chapman@fdean.gov.uk +44 (0)1594 812329
Wendy Jackson, Regeneration Manager, Forest of Dean District Council,
Wendy.jackson@fdean.gov.uk +44 (0)1594 812645

Appendix F Management and Monitoring Prescriptions

The following tables set out the Management and Monitoring Prescriptions by Habitat or Species Type, along with the Objectives of that Management; specific prescription measures relating to that habitat; and frequency of management and monitoring activities, following completion of the Site Establishment Works.

Furthermore, where there are considerations that are relevant to the interface of habitat types or species considerations relevant to management, these are described under “other considerations”.

These management and monitoring prescriptions should be read with the main text of the LHMP, to provide context to these prescriptions. A Management and Monitoring Activity Schedule for the 30 years following completion of the Site Establishment Works is also provided at **Appendix G**. Note that all management activity frequencies, extents and approaches are subject to adjustment, depending on the outcomes of monitoring. The proposed scope and timings and also been reviewed and updated in the light of the agreed scope of habitat management and monitoring works described in the NRW-approved Water Vole Management Plan for the Site (RSK Biocensus, 2025a).

Full formal review, and as necessary, update of the LHMP, will take place a minimum of every 5 years, to allow the plan to evolve in response to monitoring findings. Any proposed changes to the LHMP will be discussed and agreed with Neath Port Talbot Council and NRW.

F.1 Reedbed Complex

Management or Monitoring Prescription	Management Objectives or Monitoring Aim	Specific Prescription	Timing	Other Considerations
Monitoring of Reedbed Complex - Establishment	Monitoring to confirm re-establishment through natural regeneration of the reedbed complex within the temporary works area following completion of works.	Monitoring to be undertaken during the growing season (May-August). Assess reedbed extent, density, height, and presence of associated habitats. Check for signs of scrub encroachment, drying out, impeded drainage and undesirable species (e.g. invasive species or dominance by undesirable species.	Years 1, 2 and 4 following completion of works	Monitoring to be undertaken by suitably qualified ecologist. Should monitoring indicate poor re-establishment of the reedbed complex through the proposed natural regeneration (e.g. <50% reedbed, or associated habitats, or dominance by undesirable species), adaptive measures such as selective planting, seeding or hydrological adjustment may be required. Monitoring outcomes to be reviewed with water level monitoring outcomes (see Ditches below).
Management of reedbed habitat	To maintain and enhance reedbed diversity and	Implement rotational cutting or mowing of reedbed in strips or blocks (maximum 1/3 of area in any one year).	From year 5 every 3-5 years.	Management work to take place between September and February inclusive (as a guide) to avoid any

Management or Monitoring Prescription	Management Objectives or Monitoring Aim	Specific Prescription	Timing	Other Considerations
	prevent overly uniform habitat.	Management work to take place between September and February inclusive. Cuttings to be removed to reduce nutrient loading. Management undertaken to minimise further soil disturbance or compaction if machinery used for this operation use a low-pressure machine such as Loglogic Softrak 120.		disturbance to breeding birds and to avoid water vole breeding season, as well as the breeding season for other species associated with this habitat type (e.g. reptiles and harvest mouse)
Monitoring of Reedbed habitat following Establishment	Review structure and extent of reedbed	Monitoring of reedbed vegetation in June of each monitoring year should record reed density, species composition, and the presence of transitional or mosaic habitats (e.g. areas of open water and ditches, and small areas of wet grassland and scrub/willow carr). The survey will comprise a Botanical Survey undertaken in June of each monitoring year following Phase 1 Habitat Survey methodology to map broad habitat types and extents. NVC survey methodology will used for the parcels of habitats which were the focus of the NVC surveys prior to the Proposed Development. Photographic fixed-point photography will also be used. Combined, these survey approaches will provide an assessment of overall habitat extents and diversity, compared to the baseline surveys undertaken in 2024-2025. Key targets sought in these surveys will include identification of increased diversity within the Reedbed habitats, absence of undesirable or invasive species, reduction in areas of reedbed monoculture in favour of the more diverse marshy grassland or drier grassland areas and confirmation that scrub cover does not exceed 20% of the Site area	From year 5 every 5 years	This LHMP will be updated to incorporate specific management and monitoring prescriptions for grassland, as/when such habitats become a significant feature of the Site, aligned with the outcomes of this monitoring prescription.

F.2 Ditches

F.2.1 This section has been updated to align with the approved Water Vole Management Plan (RSK Biocensus, 2025a). Note, each of the ditch management prescriptions below are to be coordinated such that no more than 33% of the ditch network and associated banks are managed in any management year, to avoid significant disturbance to water vole and other species associated with these habitats.

Management or Monitoring Prescription	Management Objectives or Monitoring Aim	Specific Prescription	Timing	Other Considerations
Management of ditch vegetation – bankside trees up to 5m from ditch	Management of trees and scrub to prevent overshading and encroachment of ditches. 90% of ditch length to remain unshaded.	Rotational pollarding of trees. Rotational management - no more than one third of the bankside trees to be managed in any one year. Frequency of management (number of years between management events) to be dictated by extent of encroachment of bankside vegetation.	Every 5 years. Following the requirements of the Water Vole Management Plan (RSK Biocensus, 2025a).	All vegetation management will take place in the period September- February inclusive (as a guide) in each management year. This timing is to avoid any disturbance to breeding birds and to avoid water vole breeding season, as well as the breeding season for other species associated with bank-side vegetation (e.g. reptiles and harvest mouse).
Management of ditch vegetation – bankside scrub and young trees up to 5m from ditch	Removal of new scrub and young tree growth since initial re-establishment or management of ditches. 90% of ditch length to remain unshaded.	Removal of new growth of scrub and young trees up to 5m from the ditch. Rotational management - no more than one third of the bankside scrub and young trees to be managed in any one year. Frequency of management (number of years between management events) to be dictated by extent of encroachment of bankside scrub.	Every year, as dictated by the Water Vole Management Plan (RSK Biocensus, 2025a) and as required based on extent of encroachment.	All vegetation management will take place in the period September- February inclusive (as a guide) in each management year. This timing is to avoid any disturbance to breeding birds and to avoid water vole breeding season, as well as the breeding season for other species associated with bank-side vegetation (e.g. reptiles and harvest mouse).
Management of ditch vegetation – reeds and marginal vegetation	Above-ground removal of reeds and marginal vegetation for managed sections of ditch. Proportion of undisturbed	Rational cutting of reed and marginal vegetation within the ditch channel to a height of 100–150 mm. One bank per ditch maximum and up to 33% of ditches to be managed in any management year to retain habitat continuity	Every year, as dictated by the Water Vole Management Plan (RSK Biocensus, 2025a).	All vegetation management will take place in the period September- February inclusive (as a guide) in each management year.

Management or Monitoring Prescription	Management Objectives or Monitoring Aim	Specific Prescription	Timing	Other Considerations
	marginal and bankside vegetation to be retained in any management year for water vole (and other species).			This timing is to avoid any disturbance to breeding birds and to avoid water vole breeding season, as well as the breeding season for other species associated with bank-side vegetation.
De-silting of Ditches including removal of any reed rhizomes present	Maintaining open water channels with a minimum summer water depth of 0.5m, whilst retaining proportion of undisturbed marginal and bankside vegetation for water vole (and other species). Preventing the natural succession and drying out of ditches	De-silting of the ditches (also including removal of any reed rhizomes) will take place on a rotational basis such that sections of the ditches will remain undisturbed in any one management year; up to one third of ditches will be de-silted/rhizomes removed in any one management year.	Each section of ditch to be managed every 5 years (i.e. each third of ditches to be managed every 5 years), commencing in year 3, or as dictated by Water Level Monitoring outcomes. Following the requirements of the Water Vole Management Plan (RSK Biocensus, 2025a)	Note anticipated water depths subject to confirmation of the outcomes of the hydrological studies ideally to be in the range 0.5m-1.2m depth. Following the requirements of the Water Vole Management Plan (RSK Biocensus, 2025a) De-silting/rhizome removal will take place in the period September- February inclusive (as a guide) in each management year. This timing is to avoid any disturbance to breeding birds and to avoid water vole breeding season, as well as the breeding season for other species associated with bank-side vegetation
Water-Level Monitoring and monitoring of ditch health including habitats.	100% of ditches to support permanent water. Check for indicators of good or poor ditch health.	Water level monitoring should take place in the same years as water vole habitat and population monitoring. With water levels being taken once in each season for each monitoring year. Anticipated water levels to be confirmed by hydrological modelling and confirmed engineering design for the ditches within the Site. Seeking to confirm water levels remain a minimum 0.5m in the summer months. Dredging to take place, where required in the years aligned with the Water Vole Management Plan requirements. In addition to water depth, visual indicators of ditch health will be recorded including flow conditions, algal blooms, vegetation	Water levels to be monitored in Years 1, 2, 3, 5, 7, 10 and every 5 years after that, following the requirements of the Water Vole Management Plan (RSK Biocensus, 2025a)	Note anticipated water depths subject to confirmation of the outcomes of the hydrological studies and drainage design based on Site topography; ideally to be in the range 0.5m-1.2m depth. Any observations of adverse issues to trigger a review of management approaches and water level control measures.

Management or Monitoring Prescription	Management Objectives or Monitoring Aim	Specific Prescription	Timing	Other Considerations
		dieback or vegetation extent, presence of non-native species.		

F.3 Scrub and Trees

Note: This management prescription relates to young scrub and trees outside of the ditch corridor (as described above) and relates to all other scrub/trees within the Site. All tree works should be undertaken by a qualified arboriculturist or tree surgeon. Works are to comply with BS3998 and HSE Forestry and Arboricultural safety leaflets. Trees are to be left with a well-balanced shape and natural appearance. Chainsaw operatives must hold a certificate of competence. Chain or hand saw wounds will be as small as possible, cutting back to sound wood leaving a smooth surface, angled to shed the water and avoiding bark tears.

Management or Monitoring Prescription	Management Objectives or Monitoring Aim	Specific Prescription	Timing	Other Considerations
Tree and scrub establishment, where appropriate for the Site	Enable the delivery of the proposed tree and scrub planting shown in the Landscape and Habitat Strategy Plan and Landscape Design. Note point in the main body of the Management Plan that the majority of the SINC is unsuitable for tree/scrub planting.	Manage to promote vigorous growth. Replace dead, missing, dying or defective plants (all planting to be checked in the summer to confirm health; with replacements to be provided the following planting season). Source replacement trees/scrub, if required, from local nursery stock and, where possible, use native trees of local provenance.	Following planting, the trees/scrub will be pruned in years 1 and 3 where required to promote vigorous bushy growth. All trees will be inspected annually in the summer for the first three years following planting and dead or dying stock will be replaced during the first available planting window.	Where possible, the cause of failure should be established. This should inform consideration of whether a like for like replacement is appropriate, whether an alternative solution is required, or if it is necessary to amend the management prescription accordingly.
Tree Guards and Stakes	Enable trees to anchor and support vertical growth form.	Adjust/replace/remove all tree stakes, ties and guards as required until anchorage has been achieved and tree has a vertical growth form. Remove guards once established.	From Year 1 of the Plan onwards until established.	
Scrub and young trees – management and monitoring	Maintain balance between habitat types associated with Site.	Monitoring of extent of scrub/young tree encroachment through fixed-point photography and/or GPS in the summer every 3 years. This will determine whether the scrub and young tree extent had increased such that above-ground removal (and stump treatment if required) should be undertaken in the following September-February inclusive	Every 3 years, or as determined by monitoring	All vegetation management will take place in the period September- February inclusive (as a guide) in each management year. This timing is to avoid any disturbance to breeding birds, as well as the breeding

		(avoiding breeding bird season etc). The decision regarding scrub clearance should consider the extent of scrub and the results of species monitoring together.		season for other species associated this Site.
Pollarding of retained trees, where required.	Tree management where over-shading areas of other interest (or required for National Grid operational reasons)	Monitoring of extent to taken place in the summer every 3 years. This will determine management requirements for following September-February inclusive (avoiding bird breeding season etc). Decisions regarding pollarding should consider extend of trees and the results of species /habitat monitoring together.	Every 3 years, or as determined by monitoring	All vegetation management will take place in the period September- February inclusive (as a guide) in each management year. This timing is to avoid any disturbance to breeding birds, as well as the breeding season for other species associated this Site.

Management or Monitoring Prescription	Management Objectives or Monitoring Aim	Specific Prescription	Timing	Other Considerations
Monitoring for water vole	To determine water vole presence/likely absence within the Site and to determine population size estimate, where present.	Monitoring for water vole will occur across all ditches on the Site to determine presence or likely absence of the species. Monitoring will occur between April and September (inclusive) during the water vole breeding period when field evidence is most abundant. During each year of monitoring, surveys will comprise of two survey visits: one survey occurring between 15 April and 30 June. And a second survey visit between 01 July and 31 September (at least 8 weeks apart) in line with current survey protocols (Dean *et al* 2016). Where evidence of water vole is found, an indication of relative population density will be estimated based on the recorded evidence of number of latrines per 100m of bank-side habitat, as described in Dean I 2016.	The monitoring will take place in years 1-3, 5, 7, 10 and then every 5 years thereafter for the 30-year Management Plan period, following the requirements of the Water Vole Management Plan (RSK Biocensus, 2025a)	Any incidental observations notes during water vole survey relevant to the implementation of the wider Management Plan to noted.
Monitoring for Bats	Determine presence/absence /use of Wildlife Tower provided through Proposed Development. Monitor species diversity and indication of abundance	Monitoring of the Wildlife Tower in June of each monitoring year. The species of any bats present, and their number, will be recorded. Any bat droppings present will be collected and sent for eDNA analysis. Activity monitoring for bats will take place through use of static detectors three times through the season in each monitoring year (covering the spring, summer	In year 3 and every 5 years subsequently for the Management Plan period.	Monitoring to be undertaken by suitably experienced ecologists and, for the check of the wildlife tower, suitably licensed bat workers. Any required reparation works to Wildlife Tower to be recorded

Management or Monitoring Prescription	Management Objectives or Monitoring Aim	Specific Prescription	Timing	Other Considerations
	through static monitoring surveys.	and autumn periods). The static detectors will be deployed in locations to match, as far as possible, the pre-construction baseline surveys to enable a review of any changes in bat activity as a result of the Proposed Development and the management described in this Management Plan.		and built into Management Plan requirements.
Check of reptile hibernacula features	Suitability of hibernacula features for reptile use	Visual checks of form of reptile hibernacula – check still provides variety of opportunities for shelter and access by reptiles (e.g. check that dead wood, for instance hasn't rotted down). Reparation works to be undertaken as prompted by visual inspection – preferably through re-use of materials from management elsewhere within the Site	Check undertaken June (concurrent with Wildlife Tower check for bats) with remedial/reparation works undertaken as soon as practically possible and prior to hibernation period.	Remedial measures undertaken as required. Disturbance to hibernacula features (including for reparation works) to be avoided during the winter whilst hibernating animals may be present.
Breeding bird survey	Monitor species diversity and indication of abundance in response to Proposed Development and Management Plan	Breeding bird survey, undertaken in March-June in each monitoring year, with 6 survey visits spread across the survey period. During each survey visit breeding bird calls and activity will be noted with a view to establishing the breeding bird assemblage present and to give an indication of breeding pairs for each species.	March-June in years 5 and 10 of the Management Plan period	
Invertebrate Survey	Monitor species diversity in response to Proposed Development and Management Plan	An invertebrate survey will be conducted with, in each monitoring year, invertebrate survey visits including the spring, summer and autumn periods. The survey protocol will follow that undertaken for the baseline survey work undertaken prior to commencement of the Proposed Development and will seek to determine the species present and their conservation value.	Surveys to be undertaken March-September every 5 years through the Management Plan period.	

F.5 Species Monitoring (Invasive and Non-Native Species)

Management or Monitoring Prescription	Management Objectives or Monitoring Aim	Specific Prescription	Timing	Other Considerations
Monitoring for Mink and control, where present.	To check for presence/absence of mink and implement control measures.	At least five mink rafts will be installed at suitable locations across the Site (as described in the Water Vole Management Plan; RSK Biocensus, 2025a) and used to record American mink activity. Rafts will be checked once a month.	Mink rafts checked monthly every year (RSK Biocensus, 2025a)	Where evidence of American mink is discovered, a capture and control program of this non-native species will be undertaken by a specialist contractor. Records of American mink will be submitted to the National American Mink recording program through Mink Mapp (https://minkmapp.uk/)
Invasive species monitoring and management	Control of invasive non-native species to avoid spread within Site	Check for invasive -native species to take place as part of water vole monitoring – particular care taken to check in typical locations for this species (e.g. ditch banks).	The monitoring will take place in years 1-3, 5, 7, 10 and then every 5 years thereafter for the 30-year Management Plan period (concurrent with water vole monitoring)	Treatment of non-native invasive plant species, if found present, to be determined with input from suitably qualified ecologist.

Appendix G Management and Monitoring Activity Schedule

Margam Substation: Landscape and Habitat Management Plan - Management and Monitoring Activity Schedule following Completion of Establishment Works
Numbers in brackets refer to the relevant section of the Landscape and Habitat Management Plan which should be read in conjuction with this Schedule.

Year	1	2	3	4	5	6	7	8	9	10	11	12	13	14	15	16	17	18	19	20	21	22	23	24	25	26	27	28	29	30
Activity																														
1. Landscape and Habitat Management Plan Reporting and Review - Every 5 years (4.2)					X					X					X					X					X					X
2. Reedbed Complex (Priority Habitat - Reedbed plus associated wetland habitat types) (6.3)																														
2A. Monitoring of natural regeneration of Reedbed habitat complex following completion of PD works and soil restoration.	X	X		X																										
2B. Following re-establishment of Reedbed, rotational management of reedbed habitat (every 3-5 years following establishment, dependent on results of reedbed monitoring - 5 year frequency shown here)					X					X					X					X					X					X
2C. Botanical Survey of Reedbed complex (whole site)					X					X					X					X					X					X
3. Ditches (6.3)																														
3A. Rotational Management of bankside vegetation (trees) up to 5m from the ditch (every 5 years, as determined by monitoring)					X					X					X					X					X					X
3B. Rotational Management of bankside vegetation (scrub) up to 5m from the ditch (every year, as determined by monitoring)	X	X	X	X	X	X	X	X	X	X	X	X	X	X	X	X	X	X	X	X	X	X	X	X	X	X	X	X	X	X
3C. Rotational Management of bankside vegetation (reeds and marginal vegetation) (Every year)	X	X	X	X	X	X	X	X	X	X	X	X	X	X	X	X	X	X	X	X	X	X	X	X	X	X	X	X	X	X
3D. Rotational de-silting of ditches - including removal of reed rhizomes and other vegetation, following the requirements odf the Water Vole Management Plan, or as dictated by water level monitoring outcomes.			X	X	X			X	X	X			X	X	X			X	X	X			X	X	X			X	X	X
3E. Water Level Monitoring and monitoring of ditch health including habitats, following the requirements odf the Water Vole Management Plan.	X	X	X		X		X			X					X					X					X					X
4. Scrub and trees (6.3) (outside of ditches)																														
4A. Scrub extent monitoring and removal where required.			X			X			X			X			X			X			X			X			X			X
4B Trees monitoring and pollarding/management where required.			X			X			X			X			X			X			X			X			X			X
5. Species Monitoring (6.4)																														
Water Vole	X	X	X		X		X			X					X					X					X					X
Bats			X					X					X					X					X					X		
Breeding Birds					X					X					X					X					X					X
Invertebrates					X					X					X					X					X					X
6. Invasive and Non-Native Species (6.4)																														
Mink - monthly monitoring and capture during trapping season.	X	X	X	X	X	X	X	X	X	X	X	X	X	X	X	X	X	X	X	X	X	X	X	X	X	X	X	X	X	X
Mink - monitoring and capture results review with NRW					X																									
Japanese knotweed and Himalayan balsam	X	X	X		X		X			X					X					X					X					X