Superseded

No. 6 Cycle Store

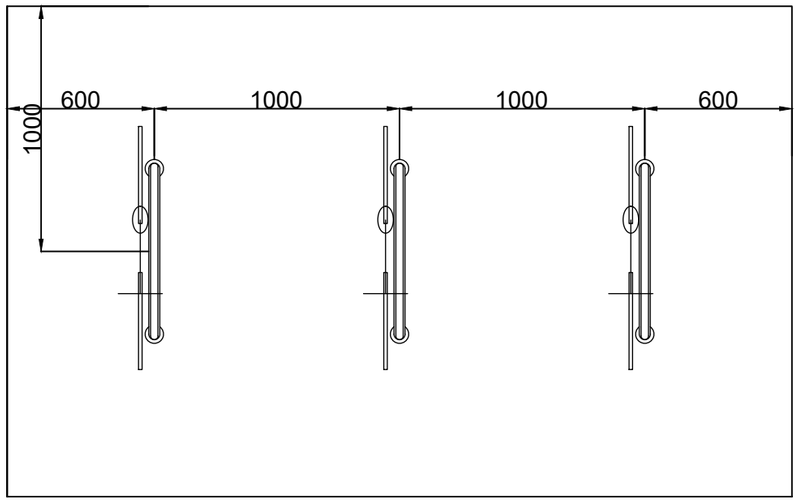

No. 6 Cycle Store
Foundation Layout

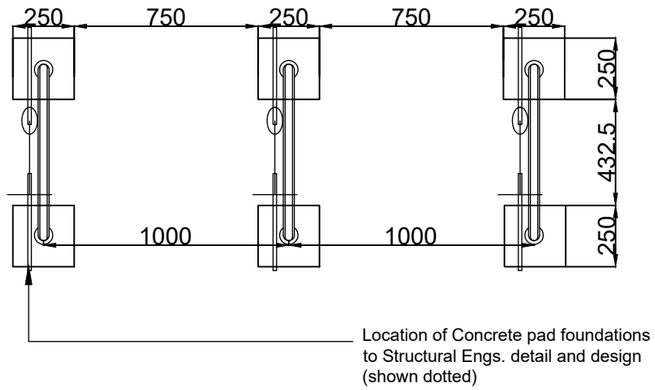

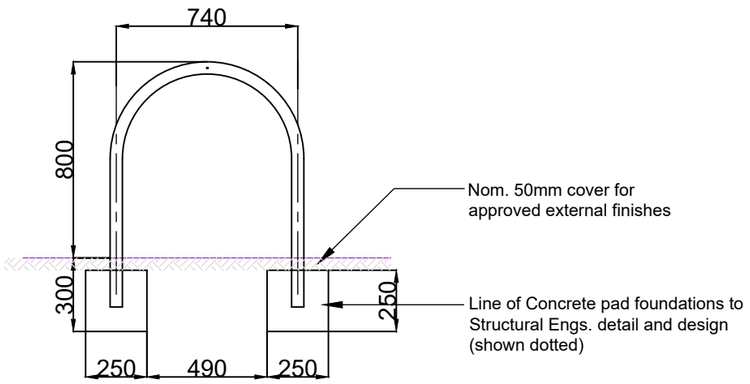

No. 4 Adapted Cycle Store

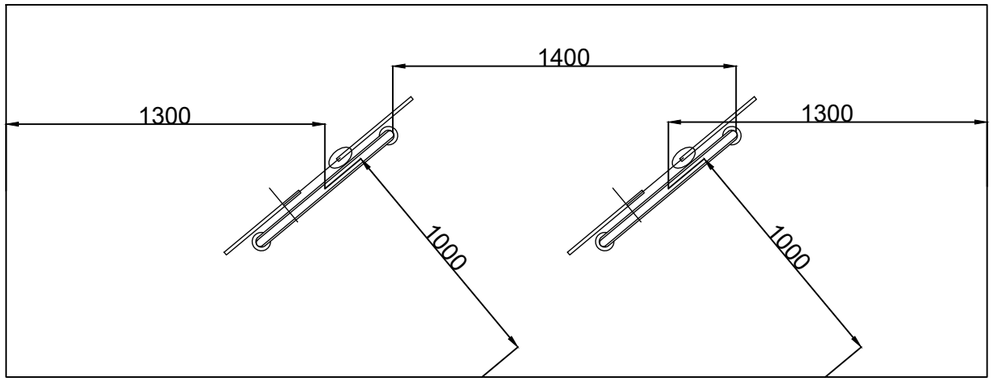

No. 4 Adapted Cycle Store
Foundation Layout

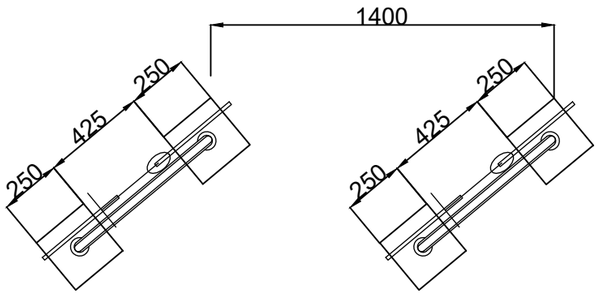

A3
Original sheet size

Note: This Drawing is copyright, its use or reproduction is subject to permission from Spring Design Consultancy Limited. All rights are reserved until invoices are paid in full. Contact SDC regarding terms & conditions. Check printed scale, responsibility is not accepted for reproduction of digital media or measuring from this document. Only figured dimensions to be used for construction. No responsibility will be taken for any design used for construction prior to receipt of relevant approvals. Report doubts/discrepancies to project Architect.

Rev	Date	By	CHK	Description
A	14.10.25	CC		Cycle stores re-designed

Client:	Project:	Drawing Title:
Tai Tarian	Tudor Inn Cimla	Cycle Store Plans & Elevations

Drawing Status:	Date:	Drawn By:	Checked:	Director:	Scale:	Job No:	Drawing No.	Rev.
TECHNICAL DESIGN	July 25	cc			1:50 @ A3	2617	01(04)301	A

spring design
Unit 2 Chapel Barns | Merthyr Mawr | Bridgend | CF32 0LS
t: 01656 656267 e:mail@spring-consultancy.co.uk