LANDSCAPING PLAN

CONSTRUCTION OF AN INDUSTRIAL BUILDING (USE CLASS B2)

AMMAN VALLEY WELDERS , PARK HOWARD ROAD, CWMGORS, SA18 1PA

JUNE 2025
(Amended July 2025)

OUR REF: 22/884

69 Walter Road, Swansea. SA1 4QA
Tel: 01792 648380 - email: sgwplanning@aol.com

FOREWORD

This document has been produced on behalf of the applicants, Amman Valley Welders, to support a planning application to Neath Port Talbot County Borough Council to construct a new light industrial building at the site, subject of planning approval reference P2022/0926.

It is to be read in conjunction with the associated information and drawings pertaining to the scheme, as submitted as part of the formal planning application.

The current Local Development Plan for the area, the current adopted Development Plan covering the area is the Neath Port Talbot County Borough Council Local Development Plan (LDP), adopted January 2016.

INTRODUCTION

This document has also been produced in accordance with the requirements of Condition 8 of planning approval reference P2022/0926, dated 29th August 2023, which states:

> *8 Prior to first use of the development hereby approved, a landscaping plan that includes management and maintenance responsibilities and details of the required floodplain compensation ground level lowering scheme that accords with the approved calculations provided in Appendix B of the Revised Flood Consequences Assessment (FCA), produced by GeoSmart Information Ltd., (Ref 77081.01R1 dated 03/03/2023), shall be submitted to and approved in writing with the local planning authority. The development shall be retained in accordance with the agreed details thereafter.*
>
> *Reason:*
> *Floodplain compensation is required in order to ensure that the development does not have an unacceptable impact upon flood risk and in order to comply with TAN 15*

PROPOSED LANDSCAPING SOLUTION

Existing Trees

All existing trees are located outside of the site boundary and will not be affected by the construction works.

If required, any existing trees will be fenced in accordance with the relevant British Standard requirements and with protective fencing as shown opposite.

No new site fencing is to be installed within the Root Protection Area (RPA) of any retained trees as part of the proposed development. No adverse impacts on retained trees are therefore expected in relation to boundary treatments.

Neither re-routing of existing services nor provision of new services is proposed or to be undertaken within the RPA of any retained tree as part of the proposed development; no adverse impacts on any tree are therefore expected in relation to service provision within the site.

It is intended to plant a range of trees, shrubs and plants within the floodplain compensation area to provide both screening and water absorption in accordance with the details and table below, which also outlines the relevant maintenance plan.

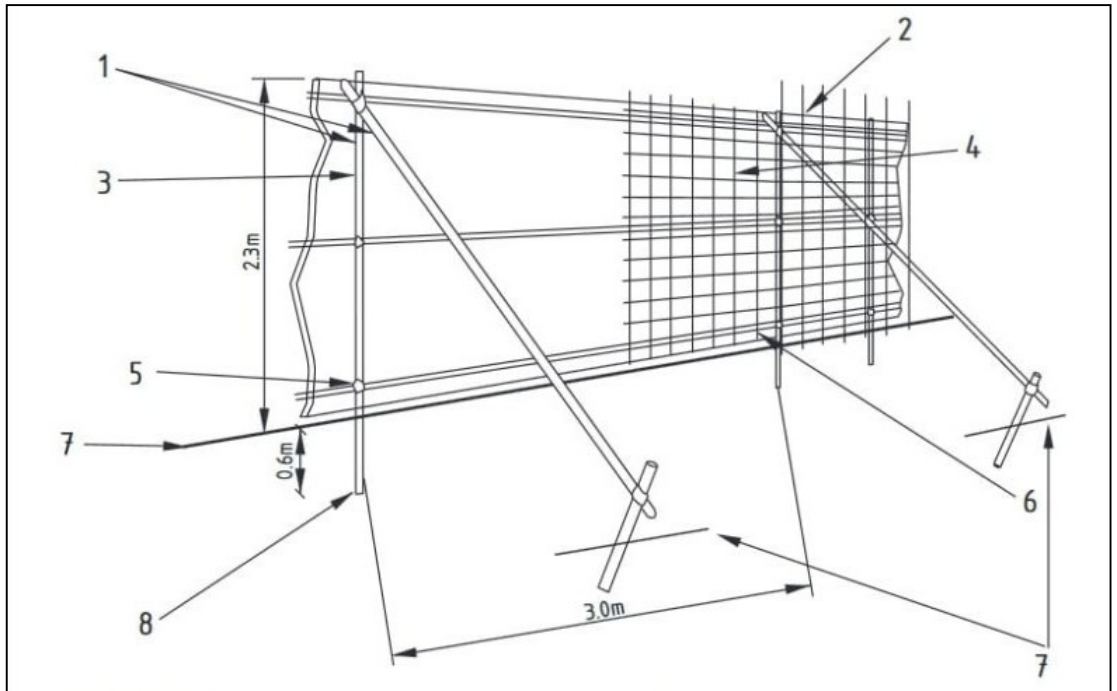

1 Standard scaffold poles
2 Uprights to be driven into the ground
3 Panels secured to uprights with wire ties and where necessary standard scaffold clamps
4 Weldmesh wired to the uprights and horizontals
5 Standard clamps
6 Wire twisted and secured on inside face of fencing to avoid easy dismantling
7 Ground level
8 Approx. 0.6 m driven into the ground

Proposed Landscaping Area

The proposed landscaping area is shown within the green dashed area below to the south-west of the proposed building

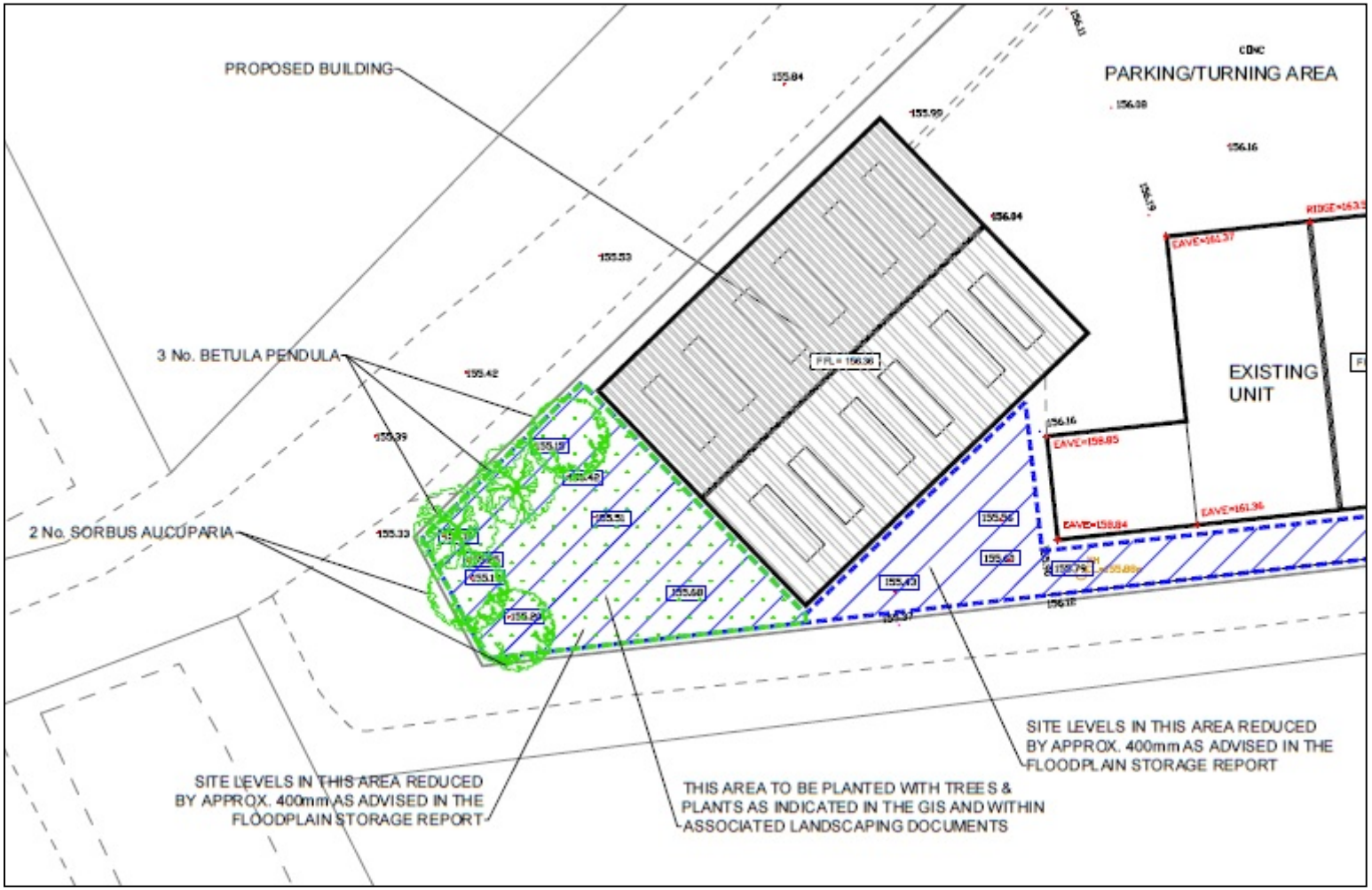

Proposed Trees

It is intended to plant a number of trees along the north-western and western boundary to provide screening benefits and to add to the water absorption properties of the area as shown on the landscaping plan, these will include:

- Betula pendula - Silver Birch x 3 no.
- Sorbus aucuparia - Rowan x 2 no.

Proposed Plants

The table below shows the proposed plants to be planted within the highlighted flood zone shown on the drawings:

Species	Size	Density
Angelica sylvestris	2 Lt	5 per square metre (27 no.)
Athyrium filix femina	2 Lt	5 per square metre (27 no.)
Caltha palustris	2 Lt	5 per square metre (27 no.)
Carex acuta	2 Lt	5 per square metre (27 no.)
Dryopteris felix mas	2 Lt	5 per square metre (27 no.)
Filipendula ulmaria	2 Lt	5 per square metre (27 no.)
Geum rivale	2 Lt	5 per square metre (27 no.)
Juncus effusus	2 Lt	5 per square metre (27 no.)
Lythrum salicaria	2 Lt	5 per square metre (27 no.)
Mentha pulegium	2 Lt	5 per square metre (27 no.)
Osmunda regalis	2 Lt	5 per square metre (27 no.)
Persicaria bistorta	2 Lt	5 per square metre (27 no.)

MAINTENANCE SCHEDULE

The table below shows the typical general maintenance schedule to be followed following the first planting:

Maintenance Schedule	Required Action	Typical Frequency
Regular Maintenance	Remove litter and debris	Monthly, or as required
	Cut grasses to retain grass heights within specified design range	Monthly (during growing season), or as required
	Manage other vegetation and remove nuisance plants	Monthly at start, then as required
	Inspect inlets, outlets and outflows for blockages, and clear if required	Monthly
	Inspect infiltration surfaces for ponding, compaction, silt accumulation, record areas where water is ponding for >48 Hours	Monthly, or when required
	Inspect vegetation coverage	Monthly for 6 months, quarterly for 2 years, then half yearly
	Inspect inlets and facility surface for silt accumulation, establish appropriate silt removal frequencies	Half yearly
Occasional Maintenance	Reseed/plant areas of poor vegetation growth, alter plant types to better suit conditions, if required	As required or if bare soil is exposed over 10% or more of the swale treatment area
Remedial Actions	Repair erosion or other damage by re-turfing or reseeding	As required
	Re-level uneven surfaces and reinstate design levels	As required
	Scarify and spike topsoil layer to improve infiltration performance, break up silt deposits and prevent compaction of the soil surface	As required

PLANTING PREPARATION AND AFTERCARE

It is essential that young trees are given every opportunity to survive planting. Poor planting practices can result in long-term problems and even the death of the tree. Maintenance in the first few years following planting is crucial to ensure establishment. The following protocol will be followed for all planted specimens:

Timing

The tree planting scheme will be implemented following completion of the development, thereby avoiding damage to new trees from construction hazards such as soil re-grading and crown damage.

Soil preparation

Preparation of the planting environment (including decompaction and drainage where necessary) will be undertaken to the standards set out in British Standard BS4428:1989 Code of practice for general landscape operations (excluding hard surfaces)

Ground for hedging will be prepared by digging over. A strip 75cm wide x 25cm deep will be dug over. All weeds will be removed by hand during digging over and a proprietary tree and shrub planting mix will be applied to the planting area and forked in to the top 25cm of soil.

Reception sites for container-supplied standards will be dug to a diameter twice that of the container, so as to allow integration and mixing of soils at the boundary of current root growth, thereby encouraging early root extension into site soils. To aid this process, the edges of the recipient hole will be roughened by hand with spades prior to planting.

Planting

During planting, any damaged roots will be trimmed back to healthy growth using a sharp knife or secateurs; similarly any broken or diseased branches will be pruned out.

Spiralled or girdling roots around container edges will be gently worked free and spread out during planting to integrate with adjacent mixed and site soil.

All trees planted as shown and to be a minimum of 5 metres from buildings and 3 metres from drainage.

Planting will be undertaken carefully, ensuring maintenance of the established planting depth with reference to the stem soil mark.

Plants will be firmed in once planted to ensure that soil is in close contact with all roots. Plants will be gently watered in to aid this process, with reference to the soil moisture levels at the time of planting.

All planted trees will be mulched to a depth of 7.5cm after planting to prevent weed growth.

Spiral tree guards will be installed around the base of each Beech stem to reduce potential animal and mechanical damage from strimmers.

The planted tree standards will each be staked with 2no 2.1m x 50mm (minimum diameter) round treated tree stakes, secured appropriately with adjustable, flexible ties to either side, at a height of no more than 1/3 total stem height.

As indicated above, any trees retained as part of the development will be protected with a combination of protective fencing to be erected in accordance with BS5837:2012 Trees in Relation to Construction – Recommendations, present boundary fences, hedges and walls. The areas within the protective fencing will be the ‘Protected Area’.

Tree removals and other proposed tree works will be undertaken by a suitably experienced and qualified contractor and in accordance with BS3998:1989 Recommendations for Tree Work. Stumps may be left in situ or removed as appropriate. If it proves necessary to remove stumps from within the rooting areas of retained trees, these will be ground out using a stump grinder and not excavating by machine.

Protective fencing should be erected around the extent of the tree canopy for retained trees. Fencing will be constructed using chestnut pale fencing for general protection situations and with weldmesh panels or Heras fencing, firmly fixed to scaffold framework in accordance with BS5837:2012 for specimen or TPO trees. The fencing is intended to protect all parts of the retained trees, both above and below ground level.

The protective fencing will be clearly marked indicating its purpose on site and no entry shall be permitted to fenced off areas except to erect or maintain the fencing. No plant or vehicles will cross these areas and no storage of any materials should be permitted within the fenced off areas. The fencing will remain in situ until all construction works are completed.

Any trenching for cable laying etc., will be carried out in accordance with ‘Guidelines for the Planning, Installation and Maintenance of Utility Services in Proximity to Trees (NJUG). Services will be installed outside protected areas. Should it prove necessary to install services within protected areas, further advice should be sought from a qualified arboricultural consultant. Conventional trenching within protected areas should not be permitted.

Oil, bitumen, cement or other hazardous materials should not be stacked or stored within 10 metres of a protected tree trunk. Concrete mixing should not be carried out within 10 metres of a protected tree trunk. Fires should not be lit in close proximity to protected trees.

Aftercare and Ongoing maintenance

All new plantings should be watered to avoid root desiccation and crown dieback during any prolonged periods of dry weather.

An annual inspection of new plantings will take place for the first 5 years after planting, during which time any dead or diseased specimens will be replaced like-for-like, the Beech hedge will be trimmed as required to develop density and form and the tree ties securing the standards will be inspected and adjusted as required.

During annual inspections, weeds found growing around newly planted trees and hedges will be removed, and areas beneath the trees will be re-mulched with up to 7.5cm, assisting in the suppression of future weed growth and in the uptake of water and nutrients. Herbicides will not be used beneath the trees for the purposes of weed control.

REFERENCES

BSI - British Standard BS4428:1989 Code of practice for general landscape operations (excluding hard surfaces). BSi, London, UK.

BSI - British Standards Institution (2012) BS5837:2012 Trees in relation to design, demolition and construction – Recommendations. BSi, London, UK.

BSI - British Standards Institution (2010) BS3998:2010 Tree Work. Recommendations. BSi, London, UK.

HMSO (1957) Occupiers' Liability Act, 1957. Her Majesty's Stationery Office, London, UK.

HMSO (1984) Occupiers' Liability Act, 1984. Chapter 3. Her Majesty's Stationery Office, London, UK.

Mattheck, C. and Breloer, H. (1994) The Body Language of Trees: A Handbook for Failure Analysis. Research for Amenity Trees No.4. DETR, London, UK.

NJUG (2007) NJUG Guidelines for the Planning, Installation and Maintenance of Utility Apparatus in Proximity to Trees. Volume 4: Issue 2. The National Joint Utilities Group, London, UK.

Stace, C. (1997) New Flora of the British Isles (Second Edition). Cambridge University Press, Cambridge, UK.

UK Native Wild Flora Mixtures - British Seed Houses