DEMOLITION METHOD STATEMENT

PROJECT:	Tata Steel – Unloader Dismantling
LOCATION:	Tata Steel UK Ltd Port Talbot SA13 2NG What3Words: ///hats.songbird.assume
REVISION:	02
DATE:	07/07/2025

Contents

1. SUMMARY OF THE WORK 6

1.1. Pre-commencement works 6

2. PROJECT DETAILS 6

2.1. CLIENT / PD 6

2.2. TDS PC APPOINTMENT 7

2.2.1. CDM OBJECTIVES AND STANDARDS FOR THE PROJECT 7

2.2.2. PROJECT GOALS & AIMS 7

2.3. SITE SET-UP & LAYOUT DRAWINGS 8

2.3.1. PLANT AND EQUIPMENT DELIVERIES 8

2.3.2. WELFARE DELIVERIES 9

2.3.3. INSTALLATION OF ADDITIONAL FENCING 10

2.4. WELFARE & OFFICE PLANS 10

2.5. ANTICIPATED NUMBER OF EMPLOYEES ON PROJECT 12

2.6. SITE MANAGEMENT & SUPERVISION 12

2.6.1. MANAGEMENT STRUCTURE 12

2.6.2. ARRANGEMENTS FOR MONITORING AND REVIEWING SHEQ PERFORMANCE 13

2.6.3. ROLES AND RESPONSIBILITIES 13

2.6.4. ARRANGEMENTS FOR REGULAR LIAISON BETWEEN INTERESTED PARTIES 14

2.7. Consultation & communication with the Workforce 15

2.8. TRAINING & COMPETENCY REQUIREMENTS 17

2.9. CONTACT DETAILS OF KEY PERSONNEL 17

2.10. FIRST AID PROCEDURES 18

2.11. ACCIDENT / EMERGENCY PROCEDURES 19

2.11.1. GENERAL 19

2.11.2. OTHER POINTS COVERED IN THE DSERP 19

2.12. LOCAL HOSPITAL & SNATCH ROUTE 20

2.13. WORKING HOURS 21

2.14. SIGNING IN / OUT PROCEDURES 21

3. WORK EQUIPMENT / CONTROLS 22

3.1. SECURITY FENCING 22

3.2. RESCUE BOAT 23

3.3. CRANE / BARGE EQUIPMENT 25

3.3.1. H-282 Specification: 25

3.3.2. H-282 Illustration: 26

3.3.3. LOAD CHARTS 26

3.3.4. SPUD PILES 27
3.3.5. STABILITY CHECKS 30
3.3.5.1. WATER BALLAST 31
3.3.5.2. DUTY CHARTS (EXAMPLE) 32
3.4. TRANSPORTATION OF VEHICLES (ACCESS & EGRESS ROUTES) 33
3.4.1. OVERVIEW 33
3.4.2. DESCRIPTION 33
3.4.3. SITE LOCATION, ACCESS & EGRESS 34
3.4.3.1. SITE ADDRESS 34
3.4.3.2. GENERAL SITE ACCESS/EGRESS 35
3.4.3.3. TDS – SITE ACCESS / EGRESS GENERAL OVERVIEW 37
Planning conditions / site working hours 39
3.5. NUMBER OF VEHICLES COLLECTING SCRAP PER WEEK 42
3.6. PLANT & EQUIPMENT BEING USED 42
3.7. DEMOLITION EXCAVATORS / ATTACHMENTS 43
3.8. HOT-WORK EQUIPMENT 43
3.8.1. GENERAL HOT-WORK PROCEDURES 45
3.8.2. HOT-WORK RISK ASSESSMENT 46
4. WORKING PROCESS / METHODS / CONTROLS 47
4.1. EXCLUSION ZONES 47
4.2. SIGNS 47
4.3. STRUCTURAL INTEGRITY OF EXISTING STRUCTURE(S) 48
4.4. SECURITY OF AREA 49
4.5. ASBESTOS REMOVAL 50
4.6. WORKING OVER THE SEA 50
4.7. WEATHER DURING LIFTING OPERATIONS 51
4.7.1. EXCESSIVE RAIN 51
4.7.2. EXCESSIVE GLARE 52
4.7.3. HIGH WINDS 52
4.7.4. EXCESSIVE HEAT 52
4.7.5. ELECTRICAL STORMS 52
4.8. VIBRATION & HAVS 52
4.9. SCRAP PROCESSING PROCEDURES 54
4.10. MATERIAL STORAGE & LAYDOWN 55
4.11. TEMPORARY WORKS PROCEDURES 56
4.12. PPE / RPE REQUIREMENTS & PROCEDURES 57

5. ENVIRONMENTAL / ECOLOGY / CONTROLS 58
5.1. ENVIRONMENTAL ASPECTS 58
5.1.1. EVALUATING SIGNIFICENCE OF ENVIRONMENTAL ASPECTS AND IMPACTS 59
5.1.2. PRIORITISATION OF SIGNIFICANT ENVIRONMENTAL ASPECTS AND IMPACTS 59
5.1.3. COMPILING ENVIRONMENTAL OBJECTIVES AND TARGETS 60
5.2. ENVIRONMENTAL SEARCHES 60
5.3. DUST, NOISE & VIBRATION POLLUTION / CONTROLS 61
5.3.1. DUST 61
5.3.2. NOISE 62
5.3.2.1. NOISE MITIGATION 62
5.3.3. VIBRATION MITIGATION 64
5.4. WATER / OIL / FUEL SPILLAGES / REFUELING 64
5.4.1. SPILL MANAGEMENT & PREVENTION – GENERAL 65
5.4.1.1. SPILL PREVENTION 65
5.4.1.2. POTENTIAL SOURCES 65
5.4.1.3. SPILL CONTROL 65
5.4.1.3.1. FUEL AND OIL STORAGE 65
5.4.1.3.2. SPILL RESPONSE 66
5.4.1.3.3. FIRST ACTIONS IN ALL INSTANCES 66
5.4.1.3.4. ENVIRONMENTAL OBSERVATIONS 66
5.4.1.3.5. OIL / CHEMICAL / HAZARDOUS SUBSTANCE SPILLAGE 67
5.4.1.3.6. SPILL KIT PROVISIONS 67
5.4.1.3.7. HANDLING & DISPOSAL OF COLLECTED SPILL KIT MEDIA 67
5.5. WASTE MANAGEMENT 68
5.5.1. WASTE HIERARCHY AND MINIMISATION 68
5.5.2. WASTE STREAM(S) 68
5.5.2.1. WASTE STREAM ROUTE PLAN 70
5.5.3. WASTE MANEGEMENT PROCEDURES 70
5.5.3.1. NON-HAZARDOUS WASTE MANAGEMENT 71
5.5.3.2. HAZARDOUS WASTE MANAGEMENT 71
5.5.3.3. WASTE CARRIERS 72
5.5.3.4. WASTE DOCUMENTATION DETAILS 72
6. OUTLINE METHODOLOGY 74
6.1. OUTLINE METHOD STATEMENT 74
6.1.1. METHODOLOGY GENERAL 74
6.2. OUTLINE RISK ASSESSMENT(S) 80

6.2.1. OUTLINE RISK ASSESSMENT 82

7. OUTLINE STATEMENT – TDS ON CONTROL OF PROJECTS & HISTORICAL EVIDENCE 86

7.1. COMPLAINTS PROCEDURE 87

7.2. EXAMPLES OF PREVIOUS CRANES DISMANTLED BY TDS 87

Schedule 1 – Tata Steel Environment Standard Complaints Procedure 90

1. SUMMARY OF THE WORK

This document outlines the processes/procedures for dismantling/demolition of the Jetty conveyor systems and structures.

1.1. Pre-commencement works

Prior to works commencing, TDS will carry out the following works:

- Pre-commencement inspection including condition/structural assessment of the Jetty structure. Photographs are to be taken of the work site at specified intervals:
  - Condition of site occupation.
  - Prior to commencement of the work.
  - Throughout the work phase.
  - Upon completion of the work.
  - Post-demolition inspection.

- Demolition sequencing / 3D modelling / engineering checks / temporary work design(s)
- Drafting of all site specific documentation, including, but not limited to:
  - Construction Phase Plan (CPP).
  - Emergency Response Plan (ERP).
  - Environmental Management Plan (EMP) including Environmental Monitoring Plan.
  - Spill Management Plan.
  - Site Specific Induction.
  - Task Specific Method Statements.
  - Task Specific Risk Assessments.
  - Baseline Programme of Works.
  - Quality Management Plan.
  - Site Waste Management Plan.
  - Traffic Management Plan.
  - Lift Plans.
  - Rescue Plans.

2. PROJECT DETAILS

2.1. CLIENT / PD

Client	Tata Steel UK Ltd
Principal Designer / CDM Adviser	Perses Health & Safety Consultants

2.2. TDS PC APPOINTMENT

Technical Demolition Services Limited would be appointed Principal Contractor in accordance with Regulation 5 of The Construction (Design and Management) Regulations 2015 (Statutory Instrument 2015 no. 51).

A summary of the main duties of the Principal Contractor follows and must be read in the context of The Regulations as a whole.

- Informing the client of their duties under the regulations.
- Planning, managing, monitoring and coordinating health and safety in the construction phase of the project, or the life of the project depending on the scope and contract, including; identifying, eliminating or controlling foreseeable risks; and ensuring designers carry out their duties.
- Liaising with the client and principal designer.
- Preparing the construction phase plan including periodic review and update.
- Organising cooperation between contractors and coordinating their work.
- Ensuring; suitable site inductions are provided; reasonable steps are taken to prevent unauthorised access; workers are consulted and engaged in securing their health and safety; and welfare facilities are provided.
- Liaising with the Principal Designer to help in the planning, managing, monitoring and co-ordination of the pre-construction phase.
- Taking into account the general principles of prevention.
- Providing information to the principal designer in support of compilation of the health and safety file.
- Ensuring everyone involved in working on the construction phase cooperates with each other.

2.2.1. CDM OBJECTIVES AND STANDARDS FOR THE PROJECT

- Activities will be carried out in accordance with relevant statutory provisions and shall include those items set out under CDM regulations 2015.
- Adequate facilities will be provided for employer/employee and project team consultants (as required).
- Management of the project shall include the encouragement and maintenance of the cooperation between all employees and individual project parties working on the project.
- Expert advice and assistance will be obtained were necessary to discharge obligations and duties identified within the CDM regulations.
- The works shall be completed in accordance with the quality standards specified, to program and budget as per client instructions.

2.2.2. PROJECT GOALS & AIMS

TDS have defined a series of specific goals, and aims which, when combined, will deliver a safe and successful project consisting of the following:

- To have zero RIDDOR events.
- To have no accidents on site arising from the works.
- To have no occupational ill health arising from the works.
- To ensure that no environmental impact or damage occurs because of our works.
- To ensure that 100% of persons on site receive full SHE induction.
- To ensure that there is minimum disruption to adjacent operations and the local community.
- To prevent unauthorised access to the CDM area.
- To provide safe access to, and egress from, all workplaces.
- To provide workplaces that are free from risks to the health and safety of persons at work, or affected by the work, so far as is reasonably practicable.
- Assess the impact of site activities on the environment and manage to minimize it.

- To provide operating conditions such that the lowest reasonably practicable levels of noise and dust are generated by the works.
- To consult and communicate with all involved with the works.
- To liaise with adjacent site operations and promote a collaborate approach to the works.
- To create a positive Health and Safety culture and ensure that Health and Safety is our highest priority.

2.3. SITE SET-UP & LAYOUT DRAWINGS

General Overview:

General scope of site-setup includes:

- Deliveries of required plant/equipment.
- Establishment of site compound(s) & material laydown / processing areas.
- Installation of additional Heras fencing as identified.
- Installation of site signage.
- Segregated and gated pedestrian and vehicle access points.
- Environmental monitoring systems – dust, noise, vibration at identified sensitive locations.

2.3.1. PLANT AND EQUIPMENT DELIVERIES

Plant and equipment will be delivered in the following sequence:

- Low loader/wagon to attend security
- Security contact TDS personnel via radio
- Low loader/wagon will then be escorted to the area the equipment is to be delivered.
- During off-loading of equipment, care to be taken while ascending trailers and plant.
- Fall protection must be utilised where required.

- Low loader/wagon operatives will wear correct PPE and will be always escorted by TDS personnel whilst unloading equipment.
- Only a fully trained operative will unload the item of plant and place into its designated area.
- Once plant has been delivered, low loader/wagon will be escorted back to the site entrance, driver to sign out of the TDS site.
- Low loader/wagon will be directed to Security Lodge to sign out and leave site.

2.3.2. WELFARE DELIVERIES

Welfare unit will be delivered in the following sequence:

- Hiab to attend security.
- Security contact TDS personnel via radio.
- Temporary welfare will be positioned as shown on the site plan.
- Cabin to be transported to the proposed site compound by means of Hiab lorry.
- Movement of all lorries to and from site and any reversing operations, are to be under the strict control of a banksman, who will co-ordinate all manoeuvres.
- On final positioning of the Hiab, prior to lifting off the cabin, all outriggers are to be extended to their maximum position.
- Hiab to be positioned to allow positioning of cabin without the need to over reach using the lifting arm.
- Care to be taken to avoid underground or surface services when positioning outriggers.
- A harness is to be worn by all personnel working above 2.0 m height.
- Access to the roof of the cabin is to be by ladder, for attachment of lifting equipment.
- All lifting operations are to be controlled by the trained Hiab operator, with assistance to position and land the cabins by the banksman.
- Cabins are to be trial lifted to ensure a safe and level lift from the transport.
- Re-sling the lift if required to achieve a safe and level lift from the transport.
- The lifting of the cabin from the transport is to be carried out in one continuous operation, without leaving the load suspended at any time.
- Cabin is to be positioned and levelled using jacklegs and suitable packing pieces.
- Trial opening of doors on completion of the lift will determine the level of the cabins.
- Remove lifting equipment using ladder.
- Load Hiab and escort back to security.

2.3.3. INSTALLATION OF ADDITIONAL FENCING

The main CDM work area and Jetty is secured by existing fencing installed by the client.

Where identified, additional Heras fencing is to be installed to enforce pre-determined exclusion zones.

Operatives are to erect the fencing as per the manufacturers' instructions. The block feet are to be suitably positioned with the panels being lifted and placed into the feet. These are then to be secured using 2 number (upper & lower) fully tightened clips at each panel joint. This type of temporary fencing system has been chosen to eliminate the need to excavate locally where there are possible services.

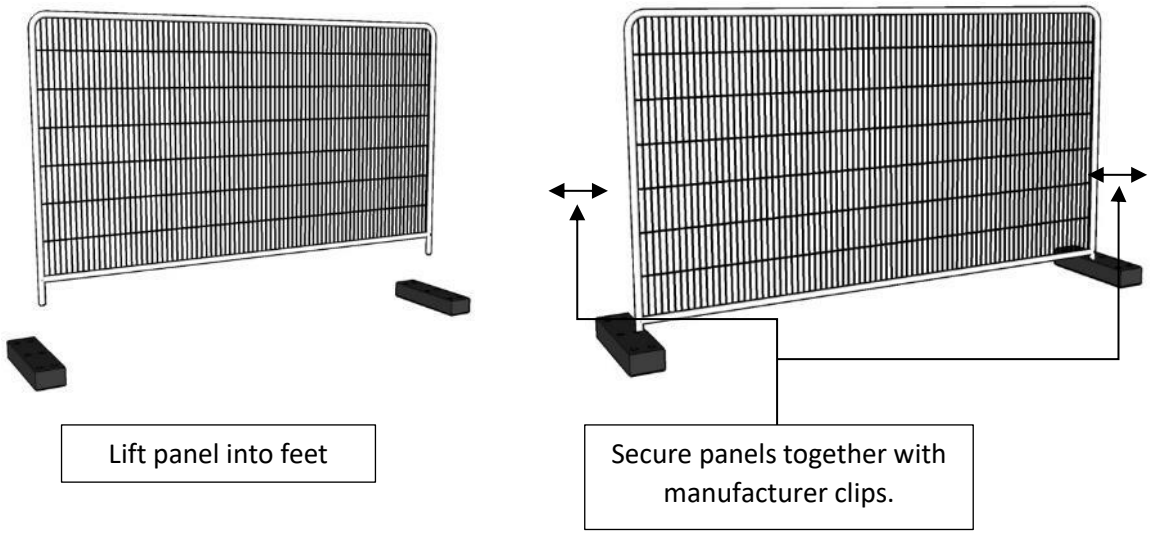

Warning notices and restricted area notices will be positioned at vantage points around the site. The demolition project manager will adapt the fence and signs to offer the best possible utilisation of the site where the works will be carried out. Signs will consist of a minimum of 'DANGER DEMOLITION WORKS', 'NO ENTRY TO UNAUTHORISED PERSONNEL', 'PPE AREA HARD HATS, BOOTS ETC',

Modifications to the initially installed fence line(s) are to be carried out in accordance with this document.

2.4. WELFARE & OFFICE PLANS

TDS propose to mobilise the following welfare facilities to site:

- 1 x COMAH rated Portakabin 24ft x 9ft anti vandal energy saver jackleg office/meeting room.
- 1 x COMAH rated Portakabin 24ft x 9ft anti vandal energy saver jackleg canteen/drying room + dehumidifier.
- 1 x COMAH rated 16ft x 9ft energy saver jackleg 3+1 toilet.
- 500-gallon effluent tank.
- Effluent tank monitor.
- Steel steps.
- Water bowser – 1400ltrs (anti vandal with on demand pump).
- Boot wash station(s).
- 2 x 10ft x 8ft steel storage container.
- First Aid facilities + burns kits.
- Firefighting equipment.
- Spill kits – wheelie bin type.

- Starlink network access point.
- Floodlights where required.
- Pedestrian barriers & access/egress points.
- Ground protection mats where required.

Illustration:

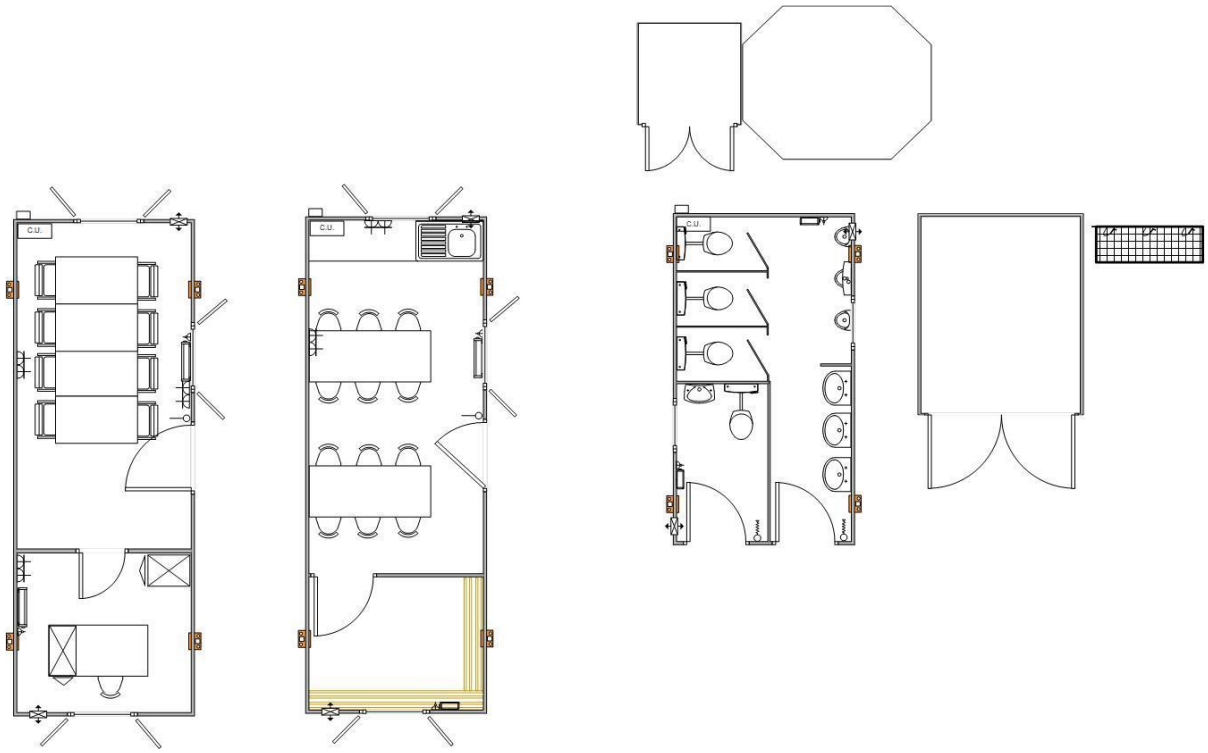

2.5. ANTICIPATED NUMBER OF EMPLOYEES ON PROJECT

Description	Onsite/Offsite visiting	Number
Managing Director	Offsite Visiting	1
Contracts Director	Offsite visiting	1
SHEQ Manager	Offsite visiting	1
SHEQ Admin	Offsite visiting	1
Non-working Site Manager	Onsite	1
Working Site Supervisor	Onsite	1-2
Crane Operators	Onsite	~2
Appointed Person	Onsite/Offsite Visiting	1
Lift Supervisors	Onsite	2
Hot-work Operatives	Onsite	2-3
Slinger/Signallers/Riggers	Onsite	2
Demolition Operatives / Labourers	Onsite	2
Machine Operators	Onsite	2
TDS Transport Drivers	Onsite/Offsite Visiting	2

2.6. SITE MANAGEMENT & SUPERVISION

2.6.1. MANAGEMENT STRUCTURE

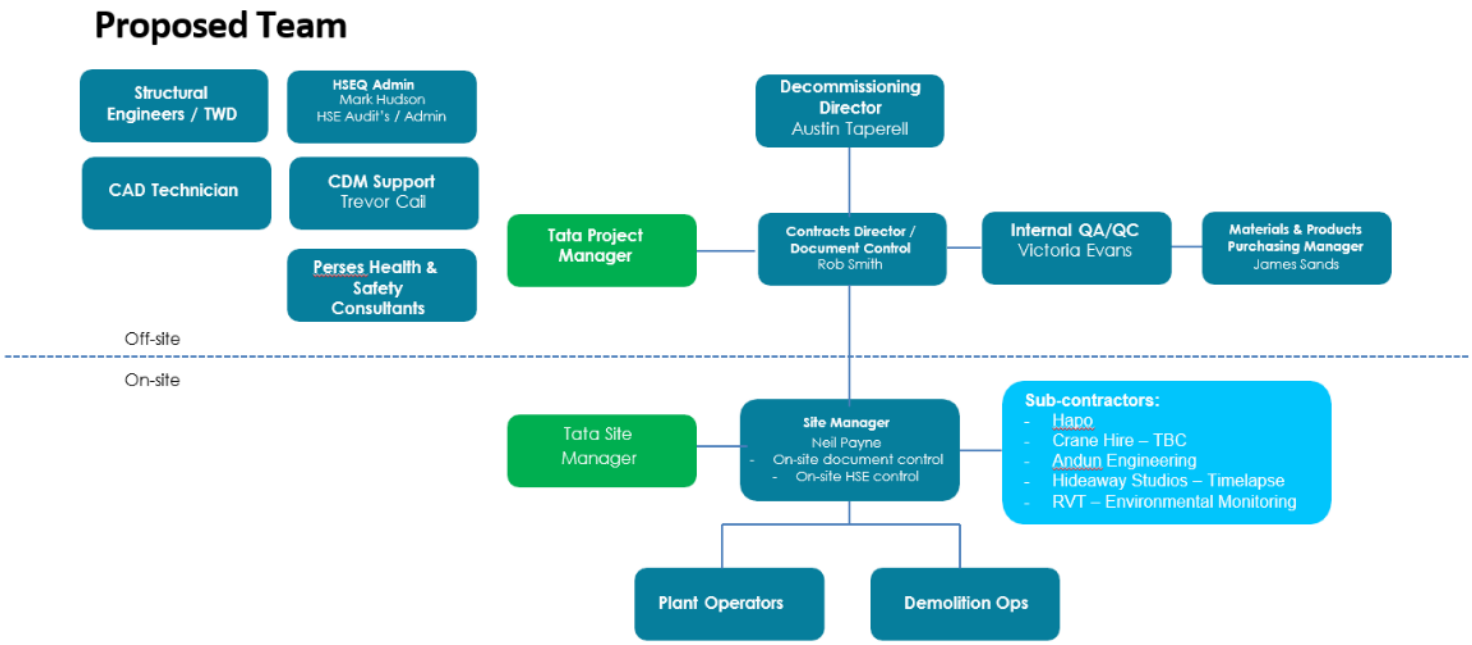

2.6.2. ARRANGEMENTS FOR MONITORING AND REVIEWING SHEQ PERFORMANCE

The works will be subjected to a KPI driven schedule, that will be monitored, consisting of audits and inspections at the following minimum frequency levels by TDS:

MANAGEMENT	
Role	**Frequency**
Managing Director or designated individual	1 audit per month
Project Manager	1 audits per month
SHEQ Admin/external/CDM Support	1 audits per month

SITE OPERATIONAL	
Role	**Frequency**
Site Manager	Weekly site inspection audit Daily work area inspection Daily briefing & records
Banksman	Daily point of work risk assessment
General operatives	Daily point of work risk assessment

Copies of all daily inspections will be held in site files. Copies of all formal management audits will be supplied to Tata/Perses within 14 days of being carried out.

2.6.3. ROLES AND RESPONSIBILITIES

Managing Director & Project Director – Austin Taperell

- Promote the positive health and safety culture by creating an interest and enthusiasm for health and safety in all activities and set a good example at all times.
- Be aware of the appropriate statutory health and safety requirements affecting the operations of the company.
- Ensure health and safety training is given to all employees as necessary.
- Ensure health and safety factors are considered at all stages of the project and that sufficient resource is available to maintain safe working practices.
- Ensure all Plant and equipment is in a serviceable condition at all times.
- Ensure plant and equipment has the necessary certificates required.
- Ensure a health and safety advisor is appointed to the project.
- Ensure compliance with the company health and safety policies is upheld.
- Allocate sufficient resource (including financial) to enable health and safety procedures and policies operative effectively.

Commercial Director / Contracts Manager – Rob Smith

- Promote the positive health and safety culture by creating an interest and enthusiasm for health and safety in all activities and set a good example at all times.
- Be aware of the appropriate statutory health and safety requirements affecting the operations of the company.
- Constantly communicate directly with projects director any health and safety issues that may occur. The projects director then instruct/inform others within the company structure or external consultants.
- Ensure health and safety training is given to all employees as necessary.
- Ensure health and safety factors are considered at all stages of the project and that sufficient resource is available to maintain safe working practices.

- Ensure all Plant and equipment is in a serviceable condition at all times.
- Ensure plant and equipment has the necessary certificates required.
- Ensure a health and safety advisor is appointed to the project.
- Ensure compliance with the company health and safety policies is upheld.
- Allocate sufficient resource to enable health and safety procedures and policies operative effectively.

Site Manager - Neil Payne

- Promote the positive health and safety culture by creating an interest and enthusiasm for health and safety in all activities and set a good example at all times.
- Ensure the health and safety coordinator undertakes his duties and that support is given to this person.
- Ensure that all person on site are aware of their responsibilities regards health and safety
- Be aware of the appropriate statutory health and safety requirements affecting the operations of the company.
- Constantly communicate directly with projects manager any health and safety issues that may occur. The projects director then instruct/inform others within the company structure or external consultants.
- Instigate any disciplinary procedures required should individuals deliberately ignore their own welfare or others regarding health and safety.
- Ensure all tasks have an agreed risk assessment.
- Ensure all tasks have an agreed method statement.
- Ensure that operatives adhere to agreed method statements and risk assessments.
- Update the safety file daily.
- Ensure sufficient first aiders are on site.
- Ensure welfare facilities are adequate for the project and numbers of persons on site.
- Encourage near miss notification – act and conclude as required.
- Conduct and register site inductions.
- Ensure good housekeeping is maintained at all times.
- Conduct regular toolbox talks
- Ensure all notice boards have relevant documentation attached.
- Ensure all access and egress routes are clear at all times.

Banksman

- Responsible to the Site Manager, supporting the works globally, and personally responsible for:
- Agree all signals to be used with the driver/operator before commencing movement.
- Maintaining agreed communications and visual lines of sight
- Ensuring routes are cleared of obstruction.
- Control the movement of the load from gate to point of application and back to gate.
- Wear designated PPE at all times and work to RAMS/Permit to Work

General Operatives

- Responsible to the Site Manager, supporting the works globally, and personally responsible for:
- Use the correct tools and equipment for the task and use all protective equipment provided.
- Carry out daily pre work checks and only use tools which are in good condition.
- Do not endanger themselves or other persons through their actions or failures to act.
- Work to agreed RAMS/Permit to Work and do not improvise.

2.6.4. ARRANGEMENTS FOR REGULAR LIAISON BETWEEN INTERESTED PARTIES

A proactive approach to a collaborate project will ensure that all matters relating to SHE will be available for discussion in a timely manner. Regular meetings are to be scheduled to ensure there is ongoing liaison between all interested parties. These are anticipated to consist of the following:

- Pre-Start meeting
- Kick off meeting.
- Weekly progress meetings
- Weekly safety meetings
- Daily briefing meetings
- Daily SIMOPS meetings

These meeting opportunities will allow all matters of SHE to be openly discussed, with the relevant persons in attendance, and afford a robust mechanism for timely information exchange etc.

2.7. Consultation & communication with the Workforce

In accordance with Regulation 14 of CDM 2015, TDS will make and maintain arrangements which will enable those affected with the works to cooperate effectively in developing, promoting and checking the effectiveness of measures to ensure the health, safety and welfare of the workers.

TDS will ensure that all employees are consulted on all matters affecting their health, safety and welfare whilst at work. Any change, which may substantially affect their health and safety at work, the information that employees must be given on the likely risks and dangers arising from their work, measures to reduce these risks and what they should do if they must deal with a risk or danger. This is to include other site operations and their associated risks and hazards. Where necessary group meetings/toolbox talks of all individual trade elements are to be conducted where interface and other issues can be addressed, and systems of work discussed.

All works to be carried out on site are to be subject to issue of a site permit to work which will refer to the appropriate method statement & risk assessments etc. Permits are to be issued weekly unless it's a hot work permit which then will be daily, are to be received and accepted by all personnel prior to commencement and are to be closed out weekly and hot work daily. Careful planning of the works and close liaison will promote a safe working environment.
To comply with the Health and Safety (Consultation with Employees) Regulations 1996, TDS will take employees' views into consideration before any decision is taken which affects their health, safety and welfare whilst at work. Where necessary new or amended procedures will be prepared and briefed to employees for their acceptance as part of this process. The method of consultation will be verbal by way of toolbox talks, method statement and risk assessment briefing or written communication with individuals or affected group of workers.

Over and above the requirements to consult with employees (defined above) the Site Manager will also ensure that all visitors to site will receive an site visitors induction to complete and all operatives including sub-contractors have read and signed (where applicable) to acknowledge understanding of all the following documents:

- Site induction
- Construction Phase Plan
- PCI information
- Methods of Work
- Risk Assessments
- COSHH Assessments
- Work Permit Systems
- Emergency Procedures
- Accident / Near miss reporting procedures.

- Traffic Management Plan
- Environmental Management Plan

The Project Manager and Site Manager will engage in regular communications with sub-contractors to ensure that each are aware of the project programme, safe systems of work and what other activities will be taking place on site at any one time. The Project Manager and Site Manager will advise sub-contractors of any changes to site conditions in good time for any implications to be assessed.
Where sub-contractors are appointed, all relevant safety critical documentation and information must be provided to the Project Manager and Site Manager prior to works commencing. This includes up to date training records, method statements & risk assessments, lift plans, records of inspection & examination, plans of work etc. This to be in a timely manner to allow for review.

To further emphasise close communication and an open consultation process, the following channels will be implemented with all personnel involved in the works and will include:

- Toolbox Talks.
- Method statement briefings.
- Daily activity briefings.

- Pre and post job briefings.
- Feedback from toolbox talks (positive and negative).
- Hazard and Near Miss reporting.
- Dialogue during HS&E audits, inspections and Management Safety Tours.
- Review of safety alerts.
- Benchmarking with defined targets.
- Safe Behavioural Discussions.
- Representatives at site meetings.
- Required Permit conditions.
- Shared learning events.
- Representatives at management review meetings.
- Notice boards and leaflet campaigns.

2.8. TRAINING & COMPETENCY REQUIREMENTS

All personnel employed on the project will hold current and in date training and certification relevant to the task being performed.

This will be checked prior to and upon arrival to site. Copies of the relevant training and certification will be sent to both the Client and Principal Designer ahead of site works commencing.

General overview of industry specific training & competency, non-exhaustive:

CCDO Demolition Manager Black Card – NVQ Level 6
CCDO Demolition Operatives
CPCS (CCDO) Plant Certification – various categories
Asbestos Awareness
Environmental Awareness
Working at Height Awareness
HSE Touchscreen & MAP Touchscreen
High Risk Confined Spaces
NPORS – Various Categories
SCO91
SCO 1, 2 & 3
Abrasive Wheels
Hot-works Training & Awareness
Emergency First Aid at Work
Temporary Works Supervisor
Temporary Works Co-ordinator
Fire Marshall
Vehicle Marshall
IPAF

2.9. CONTACT DETAILS OF KEY PERSONNEL

Name:	Austin Taperell
Title:	Managing Director
Contact Number:	
Email:	

Name:	Robert Smith
Title:	Commercial/Contracts Director
Contact Number:	
Email:	

Name:	Mark Hudson
Title:	SHEQ Admin
Contact Number:	
Email:	

Name:	Neil Payne
Title:	Site Manager
Contact Number:	
Email:	

2.10. FIRST AID PROCEDURES

TDS employ trained emergency first aiders who can act as first responders and apply rapid response treatment at the work location. The ratio of first aiders is to be 1 to 25 persons on site. This allows coverage to be present in the event of working when the site team/medic is unavailable (out of hours/weekends etc).

If first aid/medical attention is needed, in any instance, then this also needs to be recorded and reported accordingly.

Named providers
Local hospital A&E: 999
(Out of normal working hours)

Site based First Aiders are named and shown on board in cabin. Snatch routes will also be displayed within the site compound.

Local hospital A&E

Minor Injuries	Contact Numbers:
Minor Injury Unit Neath Talbot Hospital Baglan Way Port Talbot SA12 7BX	Non-Emergencies: 01639 862160

A&E Hospital:	Contact Numbers:
Morriston Hospital Emergency Department Heol Maes Eglwys Morriston Swansea SA6 6NL	Emergencies: 999 Non-Emergencies: 01792 702222

First aid kit to be in the site sign in/out cabin. Signs will be displayed showing emergency numbers and medical responses as well as locations.

2.11. ACCIDENT / EMERGENCY PROCEDURES

2.11.1. GENERAL

Regulation 30 of CDM 2015 defines that there must be suitable and sufficient arrangements made where there is a foreseeable emergency and that these procedures must include evacuation from the site (or part of it).

TDS will develop a Demolition Site Emergency Response Plan (DSERP) for the project with consideration for all currently anticipated emergency events and is a live document that will be reviewed and monitored on a regular basis as the project progresses.

This DSERP will give concise guidance on how to act in an emergency by setting out clearly defined objectives such as:

- Ensuring immediate identification of the company's lead representative during an emergency
- The availability of a response, which is
    - Pre-planned, prepared and effective
    - With competent staff designated for on and off-site.
- The implementation and management of accident/incident investigations.
- Liaison with the emergency services and other responding organisations to ensure a comprehensive, structured and effective response.
- The initiation, command and control, investigation, recovery, repair, public awareness and conclusion.

Ensuring that adequate arrangements are in place:

- Taking account of Health & Safety requirements for all parties identified as:
    - Employees, including sub-contractors
    - Clients and their staff
    - Members of the public (passengers, trespassers and others).
    - The Emergency Services and other responding organisations
- For reporting accidents and incidents in accordance with statutory requirements.
- For active co-operation between all the organisations involved.

Ensuring that adequate procedures are in place enabling:

- Preservation of evidence
- Information gathering
- Identification of underlying causes
- Remedial action
- Prevention of recurrence

2.11.2. OTHER POINTS COVERED IN THE DSERP

- Communication.
- Roles & Responsibilities.
- Points of Safety & Equipment.
- Medical Emergency Procedures.
- Emergency response in case of a fire.
- Emergency response to environmental incident / spillage.
- Damage to property / asset / vehicle incident.

- Contact with live services.
- Bomb threat.
- Rescue from MEWP.
- Emergency Evacuation Procedures.

2.12. LOCAL HOSPITAL & SNATCH ROUTE

Minor Injuries	Contact Numbers:
Minor Injury Unit Neath Talbot Hospital Baglan Way Port Talbot SA12 7BX	Non-Emergencies: 01639 862160

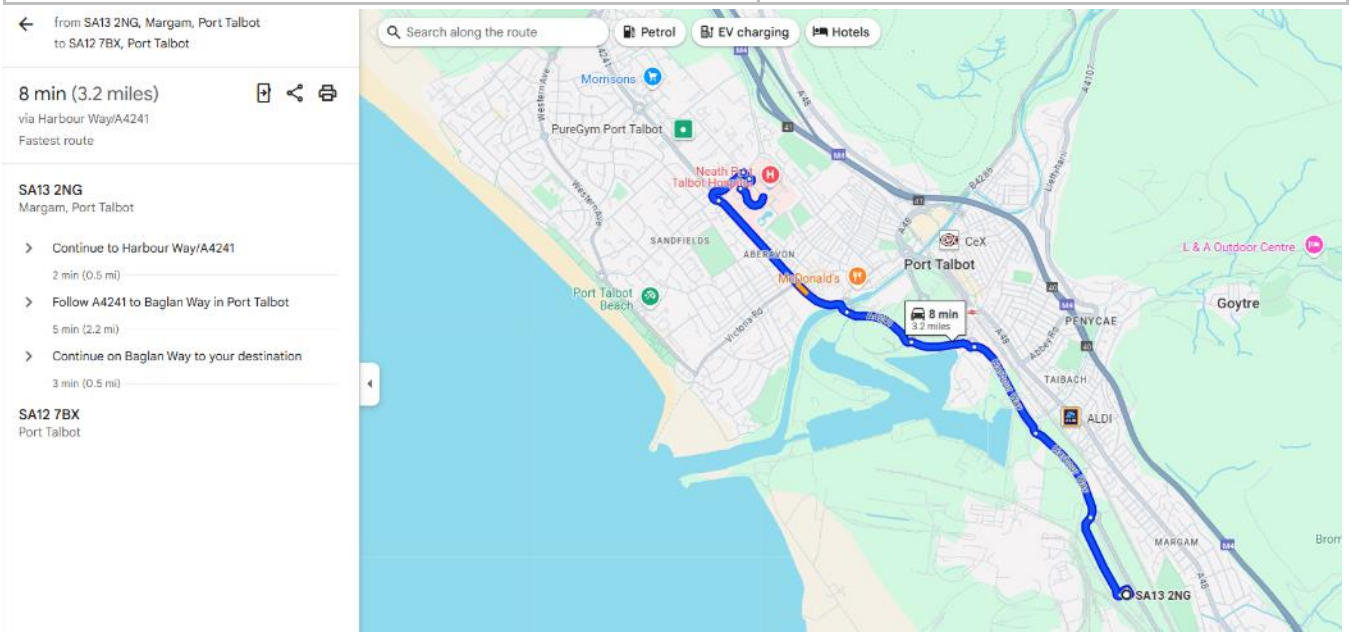

A&E Hospital:	Contact Numbers:
Morriston Hospital Emergency Department Heol Maes Eglwys Morriston Swansea SA6 6NL	Emergencies: 999 Non-Emergencies: 01792 702222

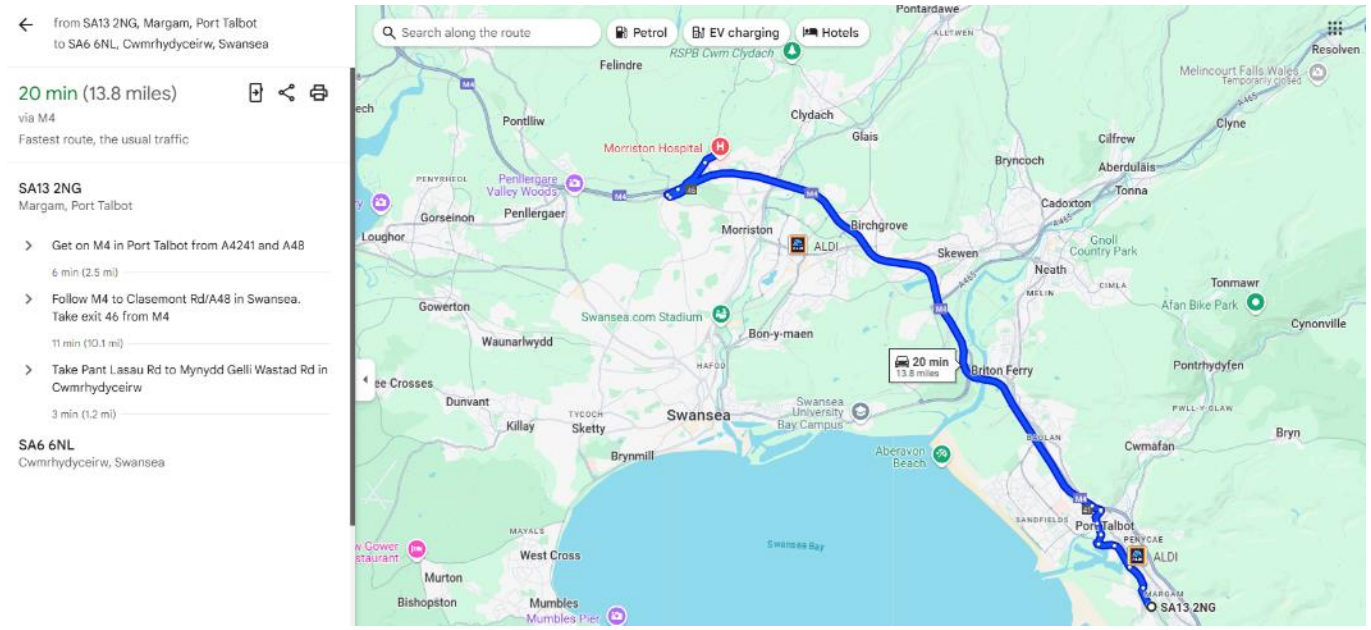

2.13. WORKING HOURS

Demolition works are proposed to be undertaken during periods identified with an 'X' within the table below:

Task Description	Core Hours*	Evenings and Weekends**	Public Holidays**
Demolition with Excavator with Hydraulic Hammer Attachment	X		
Demolition without Excavator with Hydraulic Hammer Attachment	X	X	X

Notes:

* 07:00 – 19:00 Monday – Friday, 07:00 – 13.00 Saturday

**19:00 – 20:00 Monday – Friday, 13.00 – 20:00 Saturday, 07:00 – 20:00 Sundays and Public Holidays

The working pattern for contractors will be:

Week 1: Monday – Sunday

Week 2: Monday – Friday (early finish to enable travel from site)

No works outside the permitted hours will be undertaken without the permission of the local planning authority.

2.14. SIGNING IN / OUT PROCEDURES

TDS will operate a signing in/out procedures throughout the project.

It is a mandatory requirement of all personnel employed on the project to sign in/out on a daily basis.

Tata site wide requirements for general site access will be observed.

1

SIGNING IN SHEET

Date	Name	Signature	Company	Inducted?		Time In	Time Out
				YES	NO		

All personnel will undergo the Tata site induction and TDS site induction upon arrival to the site office. The site office will be clearly signposted.

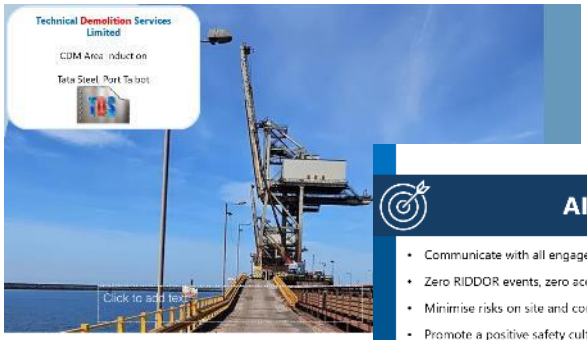

AIMS & GOALS

- Communicate with all engaged with the works
- Zero RIDDOR events, zero accidents and zero incidents
- Minimise risks on site and control all hazards
- Promote a positive safety culture
- Control environmental impact (dust, noise, vibration)
- Work with local assets and minimise impact to all
- Ensure 100% of all site operational personnel are inducted

EMERGENCY

- CDM Area emergency procedure
- Raise the alarm by most suitable immediate means:
  - Air horn for 30 seconds pointed in different directions so all can hear
  - Radio directly to site manager on dedicated channel
  - Verbally by shouting and making sure anyone close by can hear
  - Visually by making yourself known to anyone close by see you
  - Follow procedure to evacuate and go to muster point

3. WORK EQUIPMENT / CONTROLS

3.1. SECURITY FENCING

The main CDM work area and Jetty is secured by existing fencing installed by the client.

Where identified, additional Heras fencing is to be installed to enforce pre-determined exclusion zones.

Operatives are to erect the fencing as per the manufacturers' instructions. The block feet are to be suitably positioned with the panels being lifted and placed into the feet. These are then to be secured using 2 number (upper & lower) fully tightened clips at each panel joint. This type of temporary fencing system has been chosen to eliminate the need to excavate locally where there are possible services.

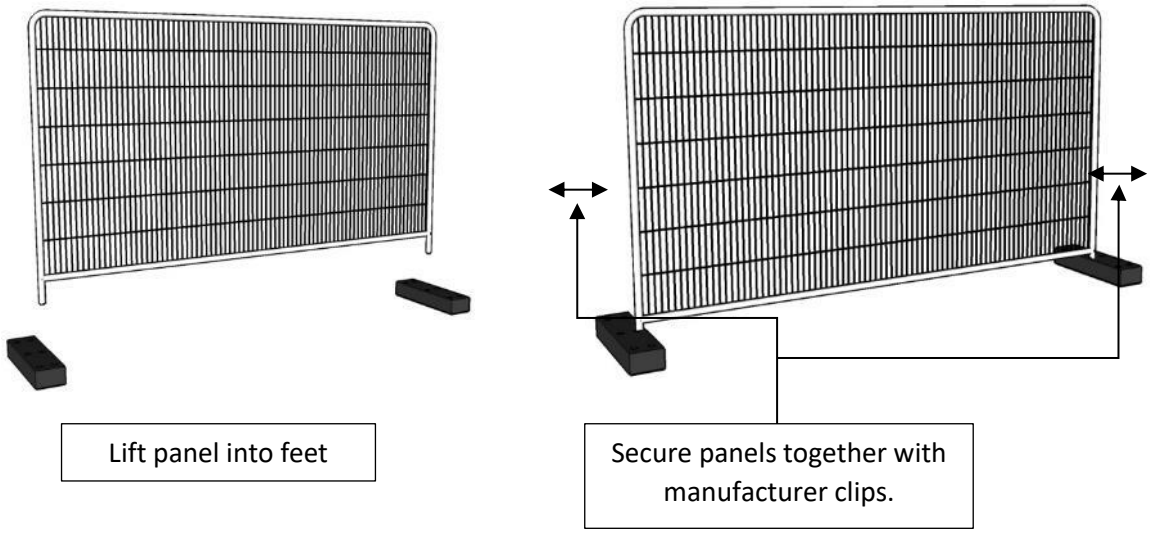

Warning notices and restricted area notices will be positioned at vantage points around the site. The demolition project manager will adapt the fence and signs to offer the best possible utilisation of the site where the works will be carried out. Signs will consist of a minimum of 'DANGER DEMOLITION WORKS', 'NO ENTRY TO UNAUTHORISED PERSONNEL', 'PPE AREA HARD HATS, BOOTS ETC',

Modifications to the initially installed fence line(s) are to be carried out in accordance with this document.

3.2. RESCUE BOAT

- All personnel working within 2m of the jetty edges will wear a life jacket where edge protection is not in place.
- The 'man in water' recovery plan (extract below) will be briefed and understood by all personnel involved in the lifting operation.

General Overview – procedure for the safe retrieval of a person from the water using a safety boat:

1. **Preparation:**
   - **Qualified Personnel:** Ensure that a qualified safety boat driver is present. Have undertaken Sea Survival training.
   - **Safety Equipment:** Confirm that the safety boat is equipped with necessary safety gear, including life jackets, throw lines, and rescue aids such as a lifebuoy.
   - **Communication:** Establish clear lines of communication between the safety boat crew and the person in the water.
2. Approach and Positioning:
   - **YELL "Person in the Water"** immediately after a person goes in the water, alert the rest of the crew by shouting "person in the water".
   - **Approach Slowly:** Approach the person in the water at a control speed to avoid creating waves or turbulence.
   - **Keep the person in sight:** Maintain visual contact with them at all times.
   - **Position the Boat:** Position the safety boat alongside with the person on the lee side, keeping a safe distance to prevent accidental collisions.
3. **Recovery Process:**
   - **Stop Engine:** When recovering a person from the water, stop the boat's engine to prevent any risk of injury from the propeller.
   - **Deploy Buoyant Devices:** Throw a lifebuoy with a line or any other buoyant object toward the person.
   - **Assist the Person:** If the person is conscious and able to climb, extend a hand or use a rescue aid (such as a boat hook or throw line) to help the person to the side of the boat.
   - If the boat has a boarding ladder. The person can then climb back into the boat safely.
   - If the boat does not have a ladder but has a low free board, pull the person to the side of the boat and have them face toward the boat. Grip both of the person's wrists and instruct them to do the same with yours. Smoothly and swiftly pull the person straight out of the water.
   - If the person is unconscious or cannot lift their own weight, you can lift the person by grabbing them underneath the arms.
   - **Stabilise the Boat:** Maintain stability by evenly distributing weight and ensuring the safety boat remains balanced.
   - **Access the Person:** Check the person's condition and provide any necessary first aid.
   - **Contact Emergency Services:** If they appear to be unconscious or injured, tell someone to contact emergency services immediately.
4. **Additional Considerations:**
   - Collision Awareness: Be aware of other objects in the vicinity to avoid collisions.
   - SOLAS (Safety of Life at Sea) Requirements: Familiarise yourself with SOLAS rules for recovering persons from the water.

3.3. CRANE / BARGE EQUIPMENT

TDS will be utilising the H-282 barge + SCX 5000 500 tonne crawler crane to dismantle the 3 no. unloaders located on the Jetty.

The barge would be fitted with 30m spudlegs which will be deployed utilising the crawler crane.

3.3.1. H-282 Specification:

H-282 Principal Particulars			
Build	1998	Beam overall	20.3 m
Class notation	Loyds Register ✠100 AN Pontoon	Depth	5.5 m
Flag	Panama	Summer draft	4.0 m
GT / NT	2473 t / 741 t	Ligt ship weight	1140 t
Deadweight	5430 t	Deck space	1680 m²
Lenght overall	84.6 m	Deckload	15 t/m²

H-282 Deck Equipment	
Bollard & chocks	8 x double bollard SWL 28 t
Navigation lights	1 set of two lights. Solar powered
Anchor	1 x 2 t not installed

H-282 Machinery	
Ballast system	All tanks ballastable with galvanised system
Ballast pump	2 x 600 m³/hr self priming diesel engine driven

3.3.2. H-282 Illustration:

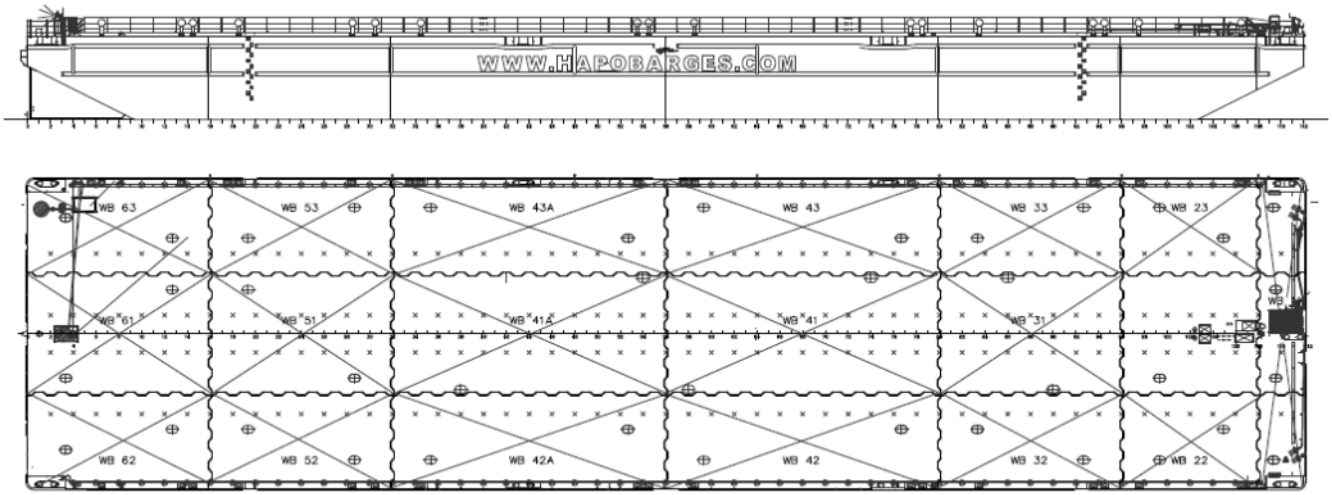

3.3.3. LOAD CHARTS

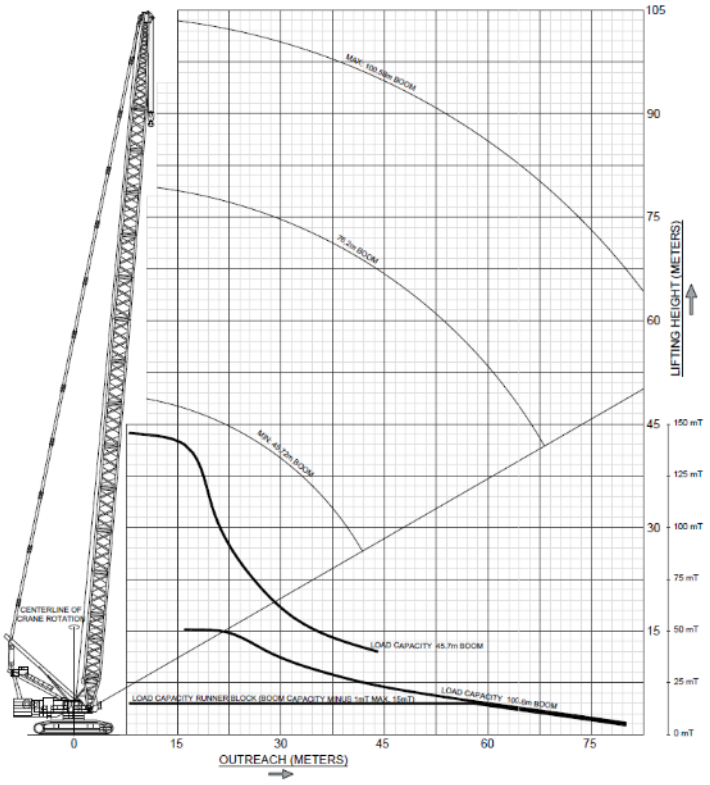

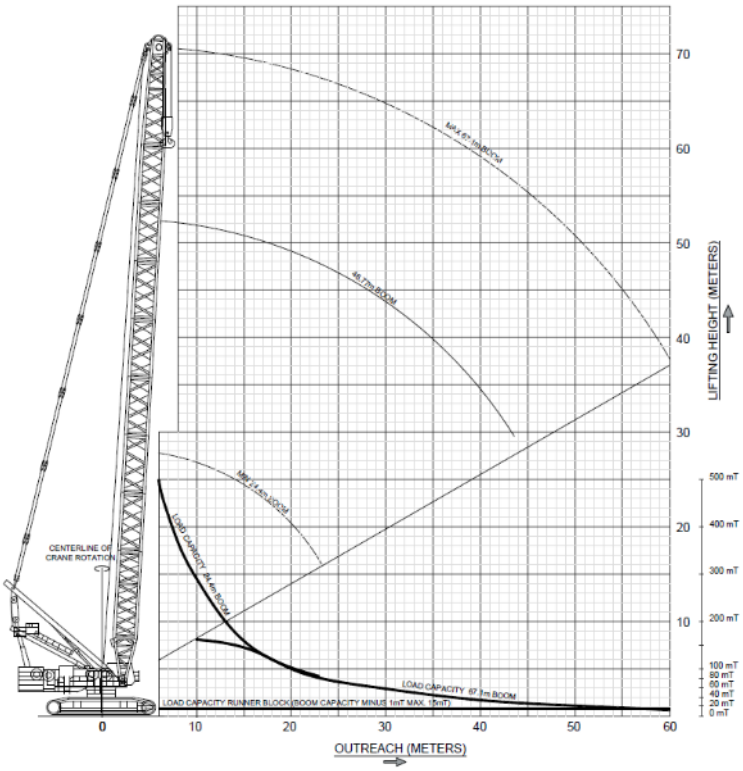

3.3.4. SPUD PILES

As per illustrations below, the barge would be deployed with 2 no. spud piles.

2 SPUDPILE INSTALLATION

The installation method of the spudpiles is typical for all three barges.

2.1 MOUNTING FRAME

Step 1

Move the mounting frame towards the side shell of the barges. The bottom connection of the mounting frame must be just below the bottom connection plates on the barge.

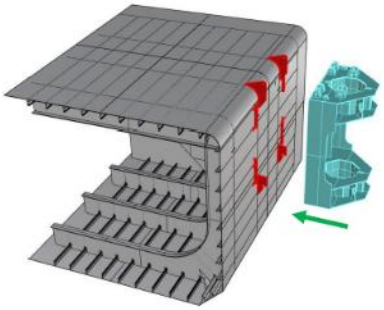

Step 2

Pull the mounting frame upward to lock the bottom connection of the mounting frame into the bottom connection plates on the barge.

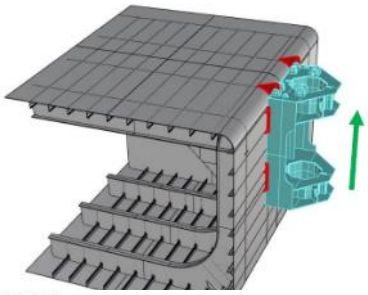

Step 3

Insert the pins into the top connection.

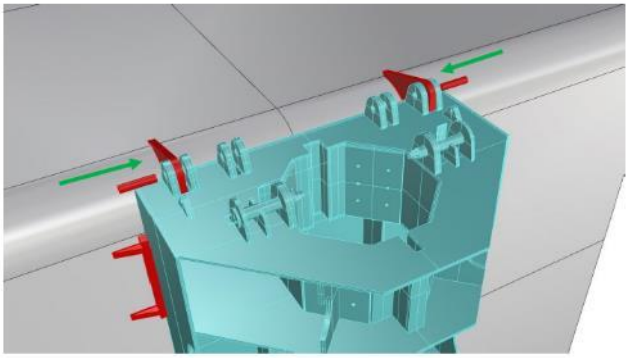

Completed installation of mounting frame

After the pins are locked, the mounting frame is ready for the installing of the spudpile.

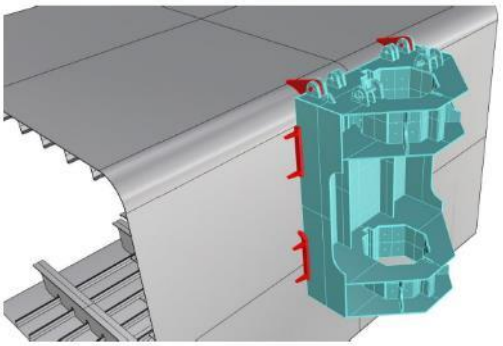

2.2 SPUDPILE

Step 1

Connect the wire in the spudpile to the padeye on the mounting frame.

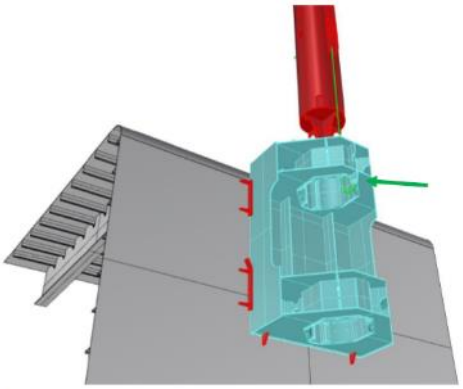

Step 2

Lower the pipe down through the mounting frame.

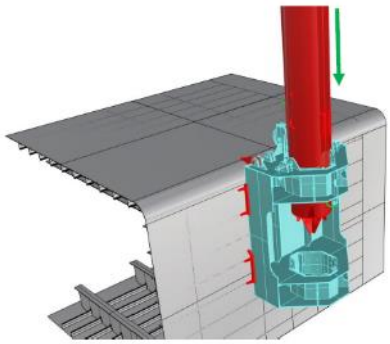

Step 3

Once the spudpile is at the desired height, lock the spudpile by inserting the pins.

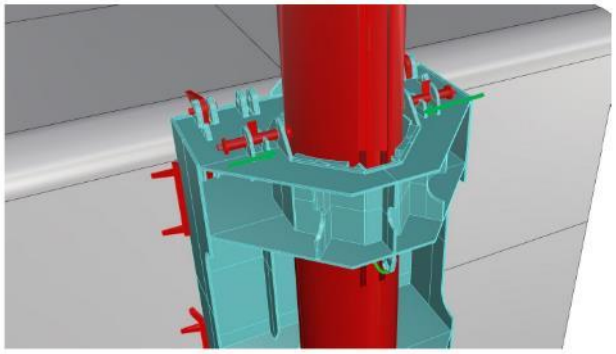

Completed installation of spudpile

After the pins are locked, the installation is complete.

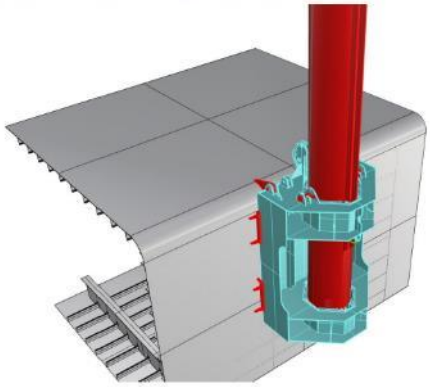

3 **LOWERING/HOISTING OF SPUDPILES**

To lower/hoist the spudpiles, the following steps have to be followed:

Step 1

Put tension on the line in the spudpile

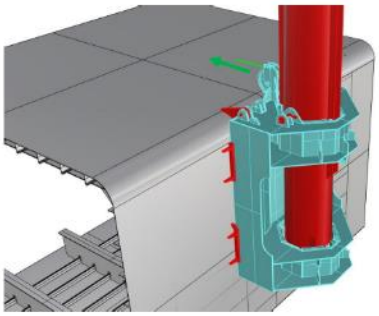

Step 2

Take the pins out of the spudpile

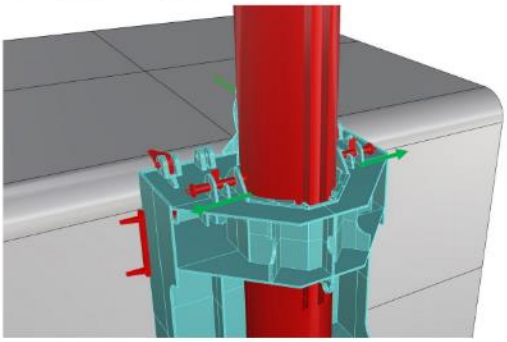

By reeling the wire in and out, the height of the spudpile can be modified. The process above can also be done using a crane that hoists the spudpile.

4.2 CONFIGURATION 2

For the second configuration, two spudpiles are installed. On the PS, the spudpile is installed on the aft connection and on the SB, the spudpile is installed on the fwd connection or vice versa.

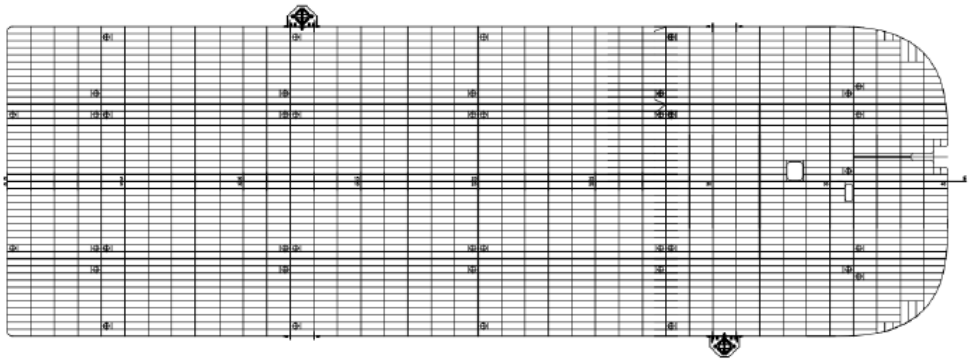

4.3 CONFIGURATION 3

For the third configuration, two spudpiles are installed. Both spudpiles are installed on the fwd connections.
This configuration is not recommended. When the current is coming from head on, the barge can start to oscillate, which would result in additional loads in the spudpiles.
If the current comes somewhat from the side, the barge wants to rotate around the spudpiles which also creates an additional load in the spudpiles.

This configuration must therefore always be combined with mooring lines to prevent rotation of the barge around the Z-axis.

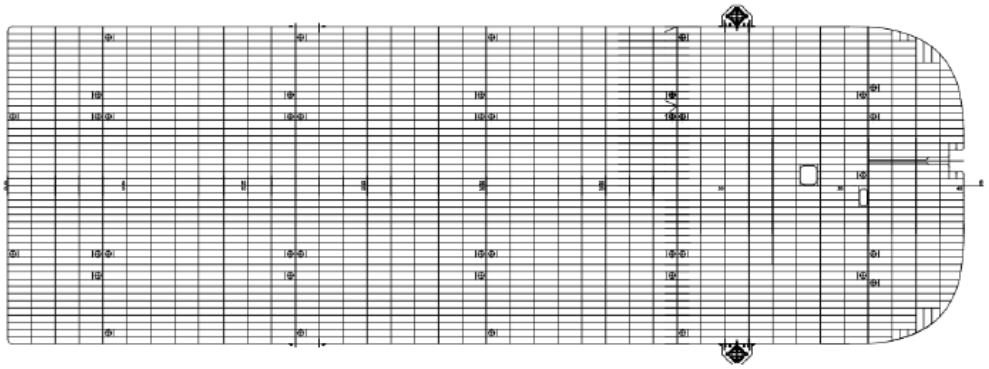

4.4 CONFIGURATION 4

For the fourth configuration, two spudpiles are installed. Both spudpiles are installed on one side of the barge.
This configuration is not recommended. When the current is coming from head on, the barge wants to rotate around the two poles. This results in additional loads in the spudpiles.

This configuration must therefore always be combined with mooring lines to prevent rotation of the barge around the Z-axis.

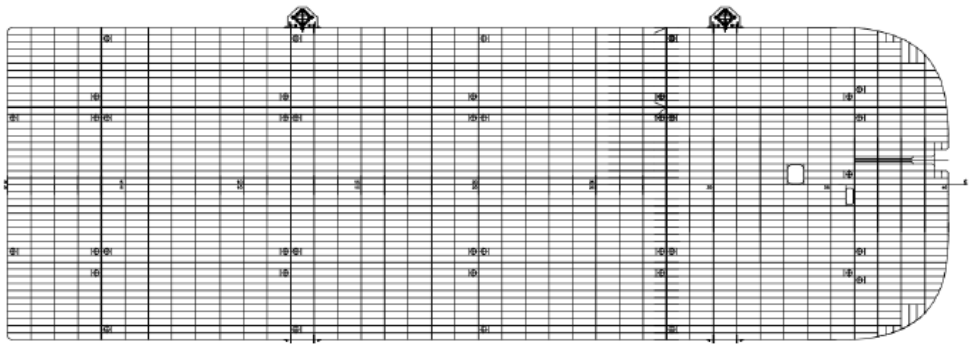

As previously mentioned, for configuration 3&4, the spudpiles should be combined with mooring lines.

The mooring line arrangement should be as follows:

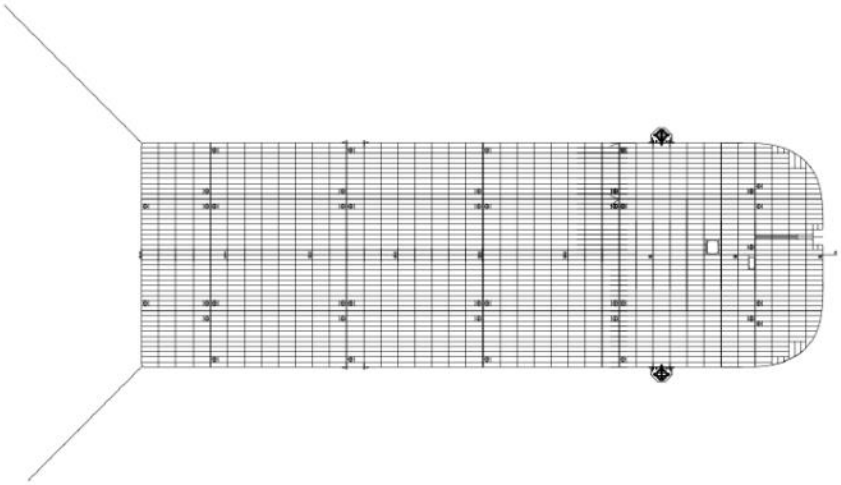

Figure 4: Recommended mooring lines configuration 3

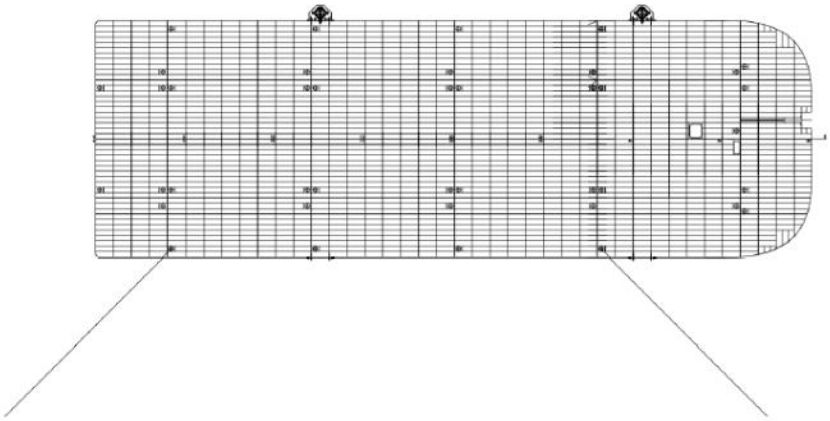

3.3.5. STABILITY CHECKS

Prior to works commencing, the relevant stability checks will be undertaken. The vessel will be loaded with the SCX5000 crane and miscellaneous deck cargo.

The SCX5000 crane is approximately 450 ton in weight, this is including the 125-ton counter ballast and crane hook(s).

The boom of the crane can be configured to various lengths based on the lifts being undertaken.

At the position of the crane, wooden mats will be placed to protect the deck of the pontoon and to distribute the weight of the crane over the deck.

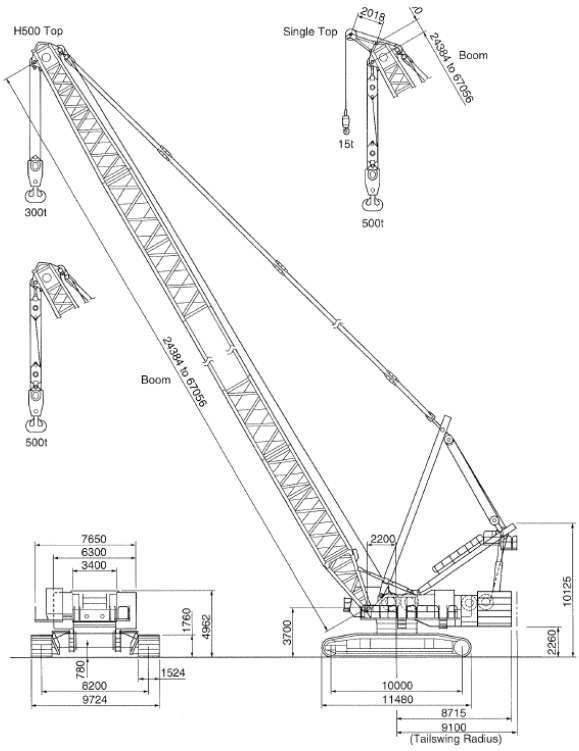

3.3.5.1. WATER BALLAST

The vessel has WB to compensate the trim and heel due to the equipment and crane on the deck. Location of the WB to be determined to suite the lift requirements.

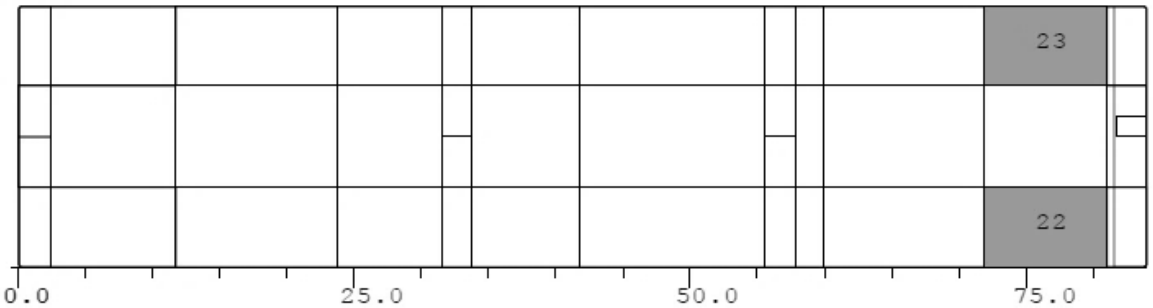

3.3.5.2. DUTY CHARTS (EXAMPLE)

As can be illustrated below, full stability calculations will be designed and load charts implemented for lifts at the various radius.

gieklengte	45.7	51.8	57.9	64.0	70.1	76.2	82.3	88.4	94.5	100.6			gieklengte
inschering	8	8	8	8	7	6	6	6	5	5			inschering
wind	14	14	14	14	11	11	11	11	11	11			wind
radius													radius
8.0	8.1/150	8.8/150											8.0
9.0	150	150	9.4/150										9.0
10.0	150	150	150	10.1/150	10.8/131								10.0
12.0	150	150	150	149	128								12.0
14.0	150	150	150	143	123								14.0
16.0	143	137	132	126	118								16.0
18.0	123	120	116	112	108								18.0
20.0	108	107	103	99.5	96.3								20.0
22.0	95.5	94.6	93.0	89.6	86.7								22.0
24.0	85.5	84.7	83.9	81.2	78.6								24.0
26.0	77.3	76.5	75.7	74.1	71.7								26.0
28.0	70.4	69.5	68.7	67.8	65.8								28.0
30.0	64.5	63.6	62.8	61.8	60.6								30.0
32.0	59.4	58.5	57.7	56.7	56.0								32.0
34.0	55.0	54.1	53.2	52.3	51.6								34.0
36.0	51.1	50.2	49.3	48.3	47.7								36.0
38.0	48.0	46.6	45.7	44.7	44.1								38.0
40.0	45.0	43.4	42.5	41.4	40.7								40.0
42.0	42.4	40.7	39.5	38.5	37.8								42.0
44.0	42.1/42.3	38.3	36.9	35.9	35.1								44.0
46.0		36.2	34.6	33.5	32.7								46.0
48.0		47.4/34.9	32.7	31.3	30.6								48.0
50.0			31.0	29.4	28.6								50.0
52.0			29.4	27.8	26.8								52.0
54.0			52.7/29.0	26.3	25.1								54.0
56.0				25.0	23.7								56.0
58.0				23.9	22.5								58.0
60.0					21.4								60.0
62.0					20.3								62.0
64.0					63.3/19.7								64.0
66.0													66.0
68.0													68.0
70.0													70.0
72.0													72.0
74.0													74.0
76.0													76.0
78.0													78.0
80.0													80.0
82.0													82.0
84.0													84.0
86.0													86.0
88.0													88.0

3.4. TRANSPORTATION OF VEHICLES (ACCESS & EGRESS ROUTES)

3.4.1. OVERVIEW

Regulation 27 of CDM 2015 gives clear instruction to the requirements to be considered where traffic routes are to be implemented on site. Regulation 28 gives further detail relative to vehicles. Traffic and plant movements are one of the biggest hazards on construction sites and every year around 100 people are affected (7 killed and 93 seriously injured – HSE statistics).

TDS have a considered traffic management strategy for the project whereby the interface between traffic and pedestrians is eliminated or, where this is not possible then, it is to be reduced to the absolute minimum. This extends to other local site users as well as the public beyond.

The traffic management plan (TMP) provides practical guidance on the planning of these issues, the control measures that will be implemented and highlights the points for consideration and necessary actions consider a series of combined strategies that effectively control to reduce the risk by such actions as:

- Minimise the potential interface with other local site(s) and public traffic
- Minimise disruption to other local site(s) and public traffic
- Reducing the number of deliveries where practicable
- Considering the staging of deliveries such that the volume of traffic is kept as even as possible avoiding peaks
- Controlling all vehicular movements on the project

Avoiding hazards and controlling the risks arising from the use of the vehicles in construction work is essential. The Health & Safety Executive (HSE) expect to see traffic managements plans that include:

- Planning and managing both vehicles and pedestrian routes
- The elimination of reversing where possible.
- Safe driving and working practices
- Protection of the public
- Adequate vision and lines of sight
- The provision of signs and barriers
- Adequate parking and off-loading/storage areas

3.4.2. DESCRIPTION

The traffic management plan is given to show the measures that TDS will implement for the project to minimise the impact to the local environment during planned traffic movement activities.

An up-front logistics plan will notify the main site operator (Tata), and other duty holders along the route (TDS as PC), that there will be a series of planned traffic movements to suit the project.

Further regular liaison will be updated should any deviation be required to the proposed activities as defined.

It is a site requirement that persons wishing to enter the main complex are to complete the Tata site induction and hold a valid certificate. During this induction, there is a section that specifically relates to site access/egress, road usage and speed limits etc. Successful completion of this induction is mandatory. TDS will then have local induction to address the site traffic arrangements specifically.

3.4.3. SITE LOCATION, ACCESS & EGRESS

3.4.3.1. SITE ADDRESS

Tata Steel UK Ltd, Port Talbot, SA13 2NG.

What3words: ///outcasts.populate.knee

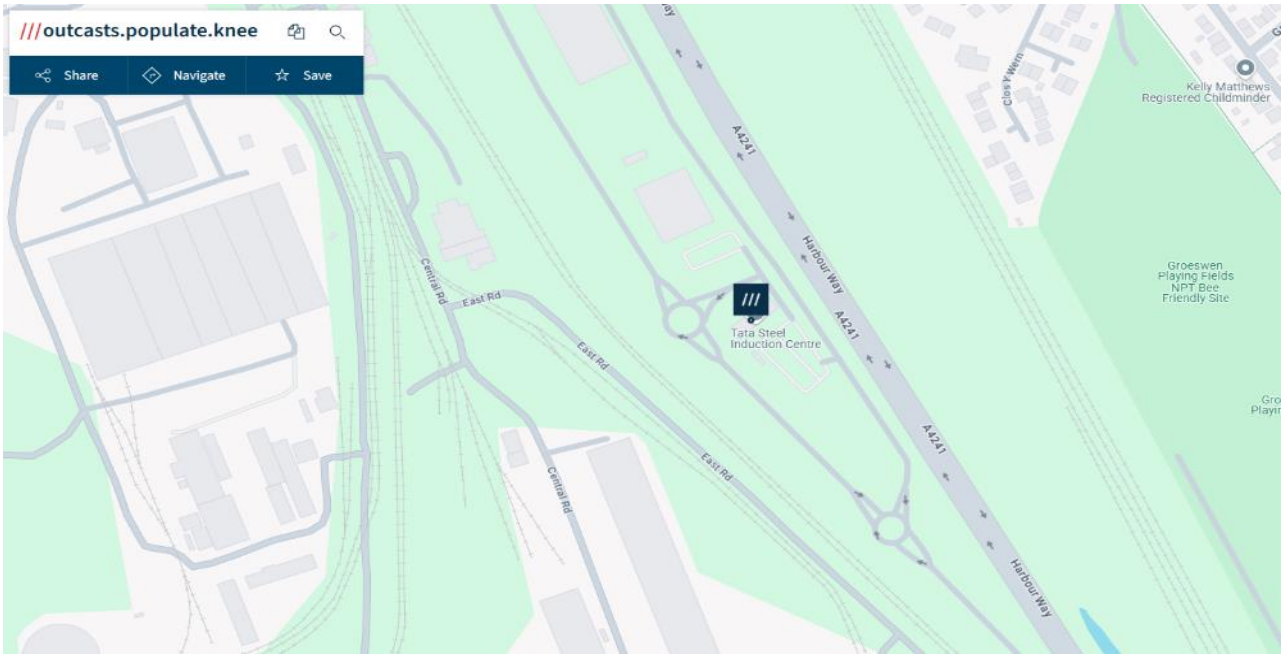

CDM Work Area

///cackling.music.cone

3.4.3.2. GENERAL SITE ACCESS/EGRESS

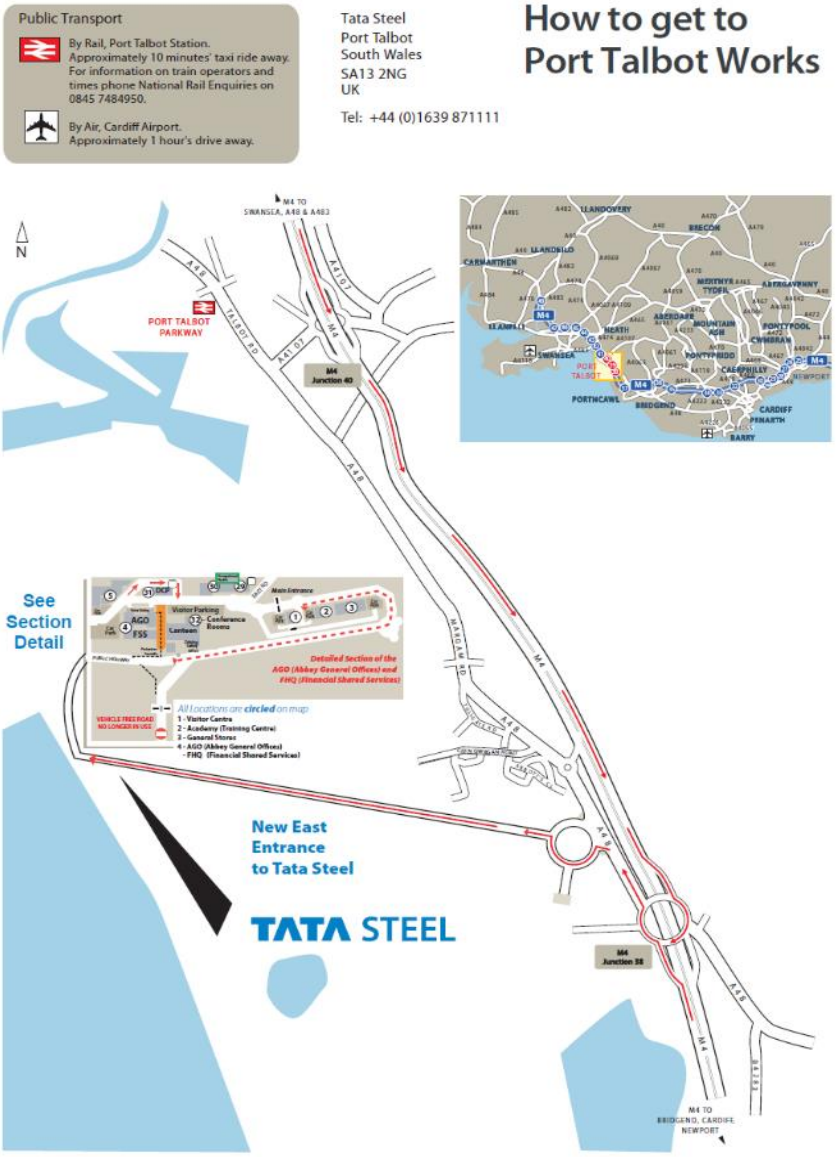

TATA STEEL

TATA

Welcome to Port Talbot Works

Site access conditions and map for visitors, contractors and hauliers.

We are happy to welcome you to our site, and hope you will enjoy your visit. At the same time, we must remind you that a steelworks can be a hazardous place. Your safety, and that of all our visitors, contractors and employees, is our prime concern. To make sure you have a safe and pleasant visit, please read through the information on this sheet and comply with all rules.

Thank You.

Site Driving Rules

- Obey the highway code and all traffic signs.
- All vehicles must be in a safe and roadworthy condition (to the relevant MOT standard).
- Park in designated areas only.
  The use of mobile phones when driving is prohibited, this includes the use of 'hands free' sets.
- Rail traffic has priority at all rail crossings.
- The maximum speed limit on site is 20 mph (32 kph), unless posted otherwise.
- Random speed checks are carried out on site.
  We randomly inspect vehicles leaving the site.
- Unauthorised passengers or animals are not allowed on site.
- CB systems must not be used when on site.
- All drivers MUST wear the appropriate PPE when loading/unloading.

Emergency contact numbers

- Fire/Ambulance 3333 or 4444.
- Security 3800.

If using a mobile phone call +44 (0)1639 872222.

Do not use 999 on site.

Give:

1. Your name
2. What has happened
3. Where the incident has occurred
4. Number of people involved

Site Access Conditions

- No visitor will be allowed on site without a prior appointment.
- All visitors must adhere strictly to the Tata Steel workplace values and rules (including health and safety rules).
- Report all accidents, hazards and near misses to your host.
- Do not put yourself in a position of risk - if in doubt, ask.
- Tata Steel UK Limited operates a no smoking policy, except in designated areas.
- All Tata Steel UK Limited information should be treated as confidential. No photography on site without permission.
- In accordance with the Tata Steel UK Limited Drug and Alcohol Policy, site access will be denied to anyone whose judgement is considered to be impaired by the influence of alcohol or other substances.

Site Access Instructions

1. All visitors must report to the Visitor Centre or, out of hours, to the Works Security Gatehouse.
2. After leaving the Visitor Centre or Gatehouse, please report directly to your host.
3. Visitors can exit the plant through either gate.

The information below must be displayed on your dashboard and must be visible from outside your vehicle.

Your one-stop for site safety

Scan the QR code or visit bit.ly/safetyukapp

3.4.3.3. TDS – SITE ACCESS / EGRESS GENERAL OVERVIEW

Pedestrians
Access for pedestrians is to be via security and along existing routes to either:

- Mess Room for site welfare (operatives) or
- Sign in/out cabin at pedestrian access gate to CDM area

Vehicles
Primary access for vehicular deliveries is to be via the main entrance:

- From local road system to security entrance & swipe in.
- Directly along site road to vehicle access gate to CDM area.
- Under banksman control to point of delivery / offloading.
- Once offloaded then back to vehicle access gate to CDM area.
- Directly along site road to security entrance & swipe out.
- Off site to local road system.
- Consider load type including dimensions and weight etc.
- Consider route height, width, turning and weight restrictions etc.

Site Roads

- Follow agreed pre-planned routes and adhere to all speed limited.

Notification & Communication

A logistics strategy is to be implemented that follows the planned programme sequence of the dismantling and demolition works. This allows an upfront notification procedure where a 7-day window and 24-hour accuracy can be communicated directly to the security gate, whenever possible, to allow deliveries to be planned accordingly to comply with site movement protocols.

The Site Manager will be the TDS point of contact and will be available on 2-way radio on a designated channel (to be issued).

A TDS two-way radio and charger will be located inside the security gatehouse. Direct communication with security to inform them/us of when vehicles/deliveries are arriving or leaving at the CDM site area.

It is proposed that the following sequence should be adopted where possible:

1. Daily update from Site Manager to Tata about planned movements for coming period(s) 24 hour and coming week(s) where known deliveries are planned.
2. Identify expected numbers and types of transport movements and include these in the above planning discussion.
3. Vehicle arrives at nominated gate and registers with Tata security.
4. At Tata security, wait for inspection check and release.
5. Tata security notifies the TDS Site Manager by 2-way radio vehicle movement is confirmed.
6. TDS Site Manager accepts and confirms that vehicle is on route to site.
7. TDS Site Manager instructs banksman to prepare gate entrance to receive vehicle.
8. Banksman receives vehicle at gate and directs into site to waiting point.

9. Banksman closes gate and directs vehicle to area required.
10. Offload/load accordingly and make pre-leaving checks.
11. Site Manager notifies Tata security that vehicle is leaving CDM area by 2-way radio.
12. Vehicle follows designated route to nominated gate at Tata security.
13. At Tata security, the vehicle has inspection check and released.
14. Vehicle then follows designated route off site to onward destination.

Delivery schedules to be copied into Tata directly on the following emails as well as normal verbal communication channels:

Procedure to segregate pedestrians & vehicles

Access and egress to the site will be defined, and shown. The following procedures are to be used for all persons attending site:

Pedestrians
Operatives are to park at the designated car park and use pedestrian routes to site security access point.

Once inside the main complex pedestrians will:

- Follow the signed route to the welfare block.
- From the above, follow the signed route to the sign in cabin and register at the pedestrian gate of the CDM area.
- Enter the CDM area behind the pedestrian segregation barrier and proceed to work area.
- When exiting, sign out of the site register.
- Follow signed route back to the welfare block.
- Exit main plant site via security gate.

Vehicles
Vehicles are to follow main site roads to arrive at the designated security gate and will:

- Follow reporting procedure above.
- Follow agreed route.
- Observe speed limits.
- Follow direction and instruction.
- Turn off engine where possible to reduce noise/dust/exhaust fume nuisance.

General
- All vehicle and pedestrian routes to be clearly segregated.
- All vehicle and pedestrian routes to have sufficient signage displayed.
- Signage to show crossing points/emergency routes/speed limits/any hazards.
    - Signage to be displayed at suitable vantage positions.
- All persons entering site to sign in & out.
- All visitors to be escorted if not fully inducted.
- All persons to wear defined PPE.
- Materials to be stored in designated areas only.
- Reversing traffic will be fully controlled by banksman with maintained visual contact.
    - If visual contact is broken, then vehicle **must** stop until re-established

Planning conditions / site working hours

Demolition works are proposed to be undertaken during periods identified with an 'X' within the table below:

Task Description	Core Hours*	Evenings and Weekends**	Public Holidays**
Demolition with Excavator with Hydraulic Hammer Attachment	X		
Demolition without Excavator with Hydraulic Hammer Attachment	X	X	X

Notes:

* 07:00 – 19:00 Monday – Friday, 07:00 – 13.00 Saturday

**19:00 – 20:00 Monday – Friday, 13.00 – 20:00 Saturday, 07:00 – 20:00 Sundays and Public Holidays

The working pattern for contractors will be:

- Week 1: Monday – Sunday
- Week 2: Monday – Friday (early finish to enable travel from site)

No works outside the permitted hours will be undertaken without the permission of the local planning authority.

TMP risk matrix & risk assessment

Risk Matrix
To be used to determine the degree of risk for each hazard i.e. 'how bad and how likely'.

	Severity of Harm				
Probability of Harm	1 = Minor	2 = Moderate	3 = Serious	4 = Major	5 = Catastrophic
1 = Improbable	Low Risk	Low Risk	Low Risk	Low Risk	Low Risk
2 = Remote	Low Risk	Low Risk	Medium Risk	Medium Risk	Medium Risk
3 = Possible	Low Risk	Medium Risk	Medium Risk	Medium Risk	High Risk
4 = Probable	Low Risk	Medium Risk	Medium Risk	High Risk	High Risk
5 = Likely	Low Risk	Medium Risk	High Risk	High Risk	High Risk

Probability Classification (P)	Severity Classification (S)	Degree of Risk (P x S)
0 = Impossible	**0 = No injury / effect**	**0 = No risk**
1 = Improbable – Very low probability of such an event occurring.	**1 = Minor** – Minor accident, resulting in no injuries or lost time, little or no damage to property or the environment.	**1 to 5 = Low Risk** – ensure controls are adhered to and activity need not alter.
2 = Remote – Would rarely occur.	**2 = Moderate** – Potential injury necessitating less than 3 days off work, damage to property or the environment requiring remedial work.	**6 to 12 = Medium Risk** – tolerable, but efforts should be made to reduce the risk where cost effective and reasonably practicable.
3 = Possible – May occur on occasions.	**3 = Serious** – Accident reportable under RIDDOR 95, serious damage to property or the environment.	
4 = Probable – Could occur frequently.	**4 = Major** – Accident resulting in serious or permanent injury, major or permanent damage to property or the environment.	**13 to 25 = High Risk** – Unacceptable except in extraordinary circumstances, all control measures must be taken regardless of cost.
5 = Likely – Very likely to occur unless activity prevented.	**5 = Catastrophic** – Accident resulting in death or severe disablement, destruction of property, irreversible damage to the environment.	

Traffic management Risk Assessment									
Hazard	**Persons at risk**	**Consequence**	**P**	**S**	**R**	**Control measure(s)**	**P**	**S**	**R**
Vehicular / Pedestrian Movements	Operatives: TDS / Tata Site Visitors General Public (beyond gate)	Personal injury being struck / trapped. Damage to plant / vehicles / apparatus / structures etc.	3	3	9	Follow PC TMP. Only trained and authorised operatives to operate site plant / vehicles. Site Management to monitor the use of site plant / vehicles.	3	1	3
Loading / unloading roll on/off skips & other transport	Operatives: TDS / Tata Site Visitors	Vehicle overturning. Falling objects. Contact with overhead services/objects. Debris falling onto roads (site & public).	3	2	6	The loading/unloading area, wherever possible and as far as reasonably practicable will be flat. Skips should be positioned away from any overhead services. All loads to be sheets/netted prior to removal from site. All personnel involved in the task are to wear correct PPE. Trained and competent banks persons to be utilised. Vehicles to be fitted with audible reversing alarms. Vehicles to use designated traffic routes. All vehicles to observe site speed limits. Any lifting equipment to be checked regularly and as required to comply with LOLER regulations. Faulty or damaged equipment to be repaired or put out of use. Access ladders on skips are not to be used unless prior approval has been granted.	3	1	3
Traffic generally	Operatives: TDS / Tata Site Visitors General Public (beyond gate)	Collision with other vehicles / pedestrians / cyclists & other road users etc. Collision with plant / equipment / apparatus / buildings etc.	2	4	8	Gates/fencing to be erected to control traffic movement on to site. Site speed limits to be strictly adhered to. Where possible, eliminate the requirements for reversing i.e. introducing a turning circle / route on site. Designated areas for loading/unloading. Routes for pedestrians to be segregated. Site signage to be erected. All personnel/visitors are to be provided traffic management information at the site induction(s). All vehicles shall be fitted with audible reversing alarms. All pre-use inspections shall be carried out and recorded.	2	2	4
						reviewed and necessary amendments made. All personnel shall be briefed on any changes to the TMP. Exclusion zones to be maintained throughout the project. Banks persons to be employed to control vehicle movements. PPE is to be worn at all times whilst on site. Deliveries/collections should be pre-planned and arrangements made with the gatehouse. Sufficient lighting shall be maintained at all times. Traffic routes are to be monitored throughout, noting any potentially hazardous defects i.e. pot holes, drains etc. Corrective measures to be implemented where necessary. Any temporary structures shall be protected against collision. Daily Activity Briefings to be carried out, highlighting all planned work/areas and any potentially conflicting activities.			
Contact between site plant / vehicles / site user vehicles and pedestrians.	Operatives: TDS / Tata Site Visitors General Public (beyond gate)	Personal injury being struck / trapped. Damage to plant / vehicles / apparatus / structures etc.	2	4	8	Only trained and authorised operatives to operate site plant / vehicles. Ensure that operatives have a valid driving license. Ensure that the agreed route is used at all times. Ensure that high visibility workwear is worn. Use banksman whilst depositing or removing materials from processing areas. Ensure that plant is operated at a safe speed as site conditions permit (e.g. gradient, weather etc.) and does not exceed the specified site speed limit. Ensure that site plant has suitable warning devices - flashing beacons, reversing alarms as appropriate. Ensure that plant / vehicles are maintained and used correctly.	2	2	4
Live Services	Operatives: TDS / Tata Site emergency services	Fire / explosion / electrocution. Damage to live services	2	4	8	Services known from site information. Consult PC CPP and carry out handover. Protection of crossing points. Note of overhead service racks. CDM area to be fenced off & controlled. Known services to be identified within site induction.	2	2	4
Material deliveries / storage.	Operatives: TDS / Tata Site Visitors General Public (beyond gate)	Personal injury being struck / trapped. Damage to plant / vehicles / apparatus / structures etc.	2	4	8	Use agreed route. Ensure that there is no un-authorised access to any unloading /storage area. Banksmen to be present during movements. Limit deliveries to periods of low pedestrian / vehicular traffic where possible. Ensure that materials are unloaded / loaded in a safe and controlled manner using the correct plant / equipment. Ensure that any plant used during this activity is maintained and used correctly.	2	2	4
Demolition Processing Areas.	Operatives: TDS / Tata Site Visitors	Personal injury being struck / trapped. Damage to plant / vehicles / apparatus / structures etc.	2	3	6	Ensure that consideration is given to the position of working areas e.g. safe access and egress. Ensure that the area is sited safely from structures and overhead services. Adhere to CPP & DCPP.	2	2	4
Road clearance.	Operatives: TDS / Tata Site Visitors General Public (beyond gate)	Personal injury being struck / trapped. Damage to plant / vehicles / apparatus / structures etc.	2	3	6	Check vehicles before leaving CDM area. Ensure that roads are kept free from debris. Ensure road cleaning plant / vehicles are provided with flashing beacons.	2	1	2

3.5. NUMBER OF VEHICLES COLLECTING SCRAP PER WEEK

Expected vehicle movements for the project:

Description	Quantity	Duration
Internal vehicle movements for scrap collection	10 movements per week	16-20 weeks
Deliveries / collections	1 incoming / outgoing movement per week	20+ weeks
Personnel movements	6-10 incoming / outgoing vehicles per day. 35-50 per week	20+ weeks

Where possible, vehicle sharing will be encouraged travelling from local accommodation.

TDS will also implement a 'site bus' for transport of personnel to and from the CDM work area.

3.6. PLANT & EQUIPMENT BEING USED

The below plant & equipment will be mobilised for this project:

Description	Quantity
Excavator - ~60 ton (rubber tracked excavators to be utilised where possible)	~2
Excavator - ~30 ton (rubber tracked excavators to be utilised where possible)	~2
Telehandler	1
MEWP	1-2
Mobile water bowser	1
Dust suppression equipment & sprays	TBC
Environmental monitoring – dust, noise, vibration	~2 or as required
Fire extinguishers/alarm systems at various locations	As required
Welfare facilities (as previously described)	As previously described
Oxy-propane	As required
Barge + crane	As previously described
Track mats – timber bog mats	As required
Heras fencing + signage	As required
CCTV security	As required
First aid & burns kits	As required at various locations
Spill kits	As required at various locations
Mobile cranes – various sizes	As required
Fuel bower(s)	As required at pre-determined and agreed location(s)
Two-way radios	As required
Harness / lanyards / fall inertia	As required
Safety boat	1

3.7. DEMOLITION EXCAVATORS / ATTACHMENTS

TDS will utilise the following demolition excavators and attachments:

NOTE: Rubber tracked excavators to be utilised on the jetty.

- Liebherr 944.
- Liebherr 954.
- Liebherr 916.
- Hydraulic shear attachment(s).
- Magnet attachment(s).
- Hydraulic grab attachment(s).

3.8. HOT-WORK EQUIPMENT

The following hot-work equipment would be utilised on this project:

- Oxygen & Propane supplies.
- Gas hoses.
- Flashback arrestors.
- Fire watch to be implemented – 60 minute minimum.
- PPE / RPE
  - Fire retardant coveralls.
  - Welding/burning gauntlets.
  - Hard Hat.
  - Safety Boots.
  - Orinisal mask (ABEK 1 filter fitted).
  - Burning goggles/visor.

Mandatory minimum site PPE Requirements:

Item of PPE / RPE	Icon	Required
Safety Helmet/Hard Hat (with chin strap) (BS EN 397 or BS EN 14052)		☒
Hi-Viz with reflective strips (vest/jacket - antistatic/flame retardant) (BS EN 471)		☒
Safety Boots/footwear (antistatic and with midsole protection) (EN ISO 20345 BS EN 345-1)		☒
Gloves (task specific) (BS EN 388)		☒
Glasses (approved LEP) (BS EN 166 minimum F grade)		☒
Coveralls (flame retardant that cover arms and legs) (EN ISO 11612)		☒

Additional identified site PPE/RPE required by risk assessment:

Additional items of PPE/RPE defined by work specific risk assessment	Icon	Required
Hearing Protection (BS EN 352-1)		☒
Disposable RPE (BS EN 149 FFP3)		☒
Airflow helmet/visor (burning) (BS EN 166 & EN 397)		☒
Burning gauntlets (BS EN 407)		☒
Burning hood / balaclava EN ISO 11612 (A1, B1, C1, F1), EN 1149 -5		☒

3.8.1. GENERAL HOT-WORK PROCEDURES

Working to a Hot Work Permit, the following will be implemented:

All hot works to be confined to the identified working area and be subject to the following:

- Daily update for planned working sequence and expectancies
- All works in strict adherence to the hot work permit issued by TDS
- Only elements identified in the method sequence cutting plan are to be hot cut
- All local areas will be cleared of any combustible materials/stockpiles etc
- Fire watch to be vigilant for spatter and/or smouldering
- Burning operatives to use extended cutting torch to minimise exposure and aid with comfortable reach

Oxy propane cutting equipment:

- Gas bottle banks to be stored correctly at ground level – upright and in cages away from other plant and boundaries etc
- Area to be fenced off, with signage present and suitable fire extinguishers present
- Gas bottle banks to have flashback arrestors and non-return gauges fitted
- Burning equipment to be inspected prior to use and ongoing daily basis
- Hoses to be run directly, where possible, and be suitably fixed to structure with working movement allowed within the hose length – not stretched/tight
- Hoses to be run directly where possible and to have good housekeeping management to avoid tripping hazard
- Hoses to be run out in longest lengths available to avoid/minimise the need for jointing
- Hoses to be checked using suitable spray or solution – not soapy water
- Hoses are depressurised at the end of each shift

During / after hot works completed:

- No hot works are to be carried out by lone operatives – must have firewatcher present
- Charged hose supply from powered bowser sited locally to be laid out such that it allows the firewatcher safe handling (attached to structure, suitable place to hold, sufficient working area etc)
- Standby to be positioned outside the hot work area and have direct radio contact with emergency control and Site Manager
- Firewatcher to be positioned inside the hot work area and always be in attendance while hot cutting activities are taking place
- The fire watcher will have charged fire hose and suitable fire extinguishers available at the point of application
- Suitable fire extinguishers placed around the hot work area at ground level that will be easily accessible and placed adjacent to work area
- All hot cutting activities will be directed away from any existing live equipment in the area and into the footprint of the boiler bottom
- Hot cutting activities will cease 1 hour before the end of each shift and the area will be monitored for a minimum of 30 minutes by the fire watcher
- If suitable, the hot working/local area may be wetted down by the firewatcher
- After wetting down, the hot cutting area will be walked around and inspected before the site is secured
- Hoses disconnected from bowser at end of every shift

3.8.2. HOT-WORK RISK ASSESSMENT

Hot works	Hot metal cutting, spark, prolonged exposure to heat, naked flame, fire, explosion, smoke and oxygen depletion, trip hazards	Burns, explosion, asphyxiation	TDS Tata	3	2	6	Fire & emergency arrangements to comply with Site requirements. Hot works to take place in designated area with man on fire watch. Area to be monitored after work ceases. A thorough re- examination of the hot working area must be made 30 minutes after conclusion of each period of work. TDS PTW. Flint gun control measures/record. Gas stored correctly. Check bottle, hoses and gun for damage. Fittings are correctly attached and free of damage prior to each use. Equipment suitably sited and clear of operations involving heat. Switch off gas after use and at the end of shift, leave bottle keys in. Dedicated fire extinguishers shall be accessible and placed no more than 10m from the specific the specific work area in compliance with the National Fire Protection Association(NFPA) standards and charged water hoses at the ready. Flint guns to be located within agreed location and issued upon hot work permit acceptance and returned upon hot work permit return. Operating area free of other combustible materials. Hot work operation to cease 1hr before end of shift. Areas to be thoroughly inspected. Check both sides of cut for obstructions. Contain sparks where practicable. Firewatcher in attendance during hot works activities. Correct PPE. Controlled areas of operations. Controlled areas for plant and personnel. Operators supplied with COSHH data. Suitable PPE to be worn at all times. Hoses to be safely stored. Ensure area of operation is free of non essential plant and personnel. When moving ensure area is clear all around. Good traffic management. The provision of heat resistant gauntlets, conforming to EN407. Heat resistant overalls required. Keep out of "Line of Fire" while carrying out activities, stop and assess the works to be done. Trained operatives only to undertake any hot works. Bottles to be fitted with flashback arrestors. Fire watchers, extinguisher and a fully charged fire hose to be in attendance / present at all times. Equipment to be checked daily for visible signs of damage, any faults should be reported, and equipment removed from service. Oxy Propane storage facility must be located in a well-ventilated area and fenced off with appropriate signage. Oxy-propane hoses to be minimum good	3	1	3	Y
							condition without repairs having the minimum number of joints with appropriately sized connectors with crimp fastenings, not jubilee clips. Scaffolding enclosure constructed around the steam drum working area sheeted with flame retardant sheeting. Fire retardant sheeting and fire blanket to be used to fully encase all elevations and the base of the scaffold access. Bagging to be secure to the side of the structure but allowing sufficient play for movement in the hot works access area.				

4. WORKING PROCESS / METHODS / CONTROLS

4.1. EXCLUSION ZONES

4.2. SIGNS

Warning notices and restricted area notices will be positioned at vantage points around the site. The demolition project manager will adapt the fence and signs to offer the best possible utilisation of the site where the works will be carried out. Signs will consist of a minimum of 'DANGER DEMOLITION WORKS', 'NO ENTRY TO UNAUTHORISED PERSONNEL', 'PPE AREA HARD HATS, BOOTS ETC',

Modifications to the initially installed fence line(s) are to be carried out in accordance with this document.

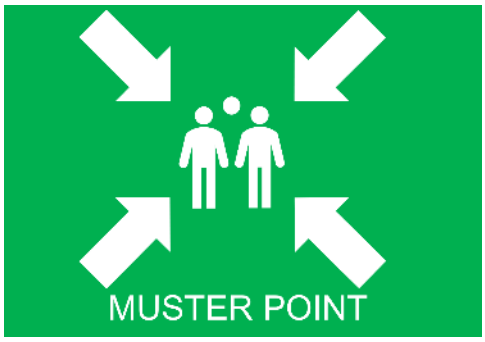

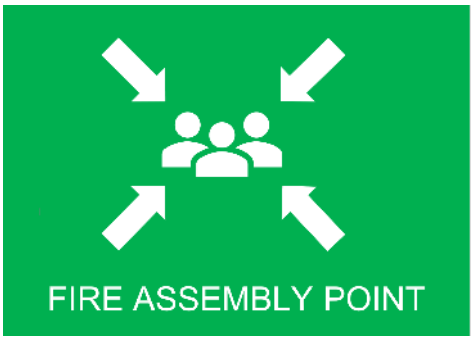

4.3. STRUCTURAL INTEGRITY OF EXISTING STRUCTURE(S)

Prior to works commencing, TDS would implement a comprehensive engineering study to determine the structural integrity of the existing structures.

All three unloaders have been in recent use, therefore, it is expected that the structural integrity will be of suitable condition.

The following engineering checks will also be carried out to determine the suitability of our proposed method. This design work will be CAT3 checked.

Loads:

The loads applied will be due to the imbalance caused throughout the demolition process. Provided these can be shown to be less than the imbalance in the current state, or during lifts, then the loads can be seen to be acceptable.

Load Path:

The off-centre weight and wind loads are supported by the structural capacity of the members and the balance from counterweights. The vertical loads are transferred through the structure and into the ground.

Stability:

The imbalance in loads is supported by the existing structure, with the counterweights and structural capacity resisting the overturning loads applied by wind and other live loading.

Example from previous projects:

$M_{rg} := W_{rg} \cdot g \cdot l_{rg} = 355.95 \cdot kN \cdot m$	Moment about slew ring
$W_{rb} := 2420kg$	Weight of runway beam
$l_{rb} := 21.4m$	Lever arm about slew ring
$M_{rb} := W_{rb} \cdot g \cdot l_{rb} = 507.87 \cdot kN \cdot m$	Moment about slew ring
$W_{rB} := 26049kg$	Weight of rear boom and access
$l_{rB} := 14.41m$	Lever arm about slew ring
$M_{rB} := W_{rB} \cdot g \cdot l_{rB} = 3681.08 \cdot kN \cdot m$	Moment about slew ring
$W_{rt} := 5300kg$	Weight of rear ties
$l_{rt} := 19.2m$	Lever arm about slew ring
$M_{rt} := W_{rt} \cdot g \cdot l_{rt} = 997.92 \cdot kN \cdot m$	Moment about slew ring
$W_{kmx} := 68000kg$	Weight of kentledge (as per weights originally provided)
$l_k := 24.053m$	Lever arm about slew ring
$M_{kmx} := W_{kmx} \cdot g \cdot l_k = 16039.8 \cdot kN \cdot m$	Moment about slew ring
$W_{kmn} := 42000kg$	Weight of kentledge (as per drawing 34937/67 (OMI-05660))
$M_{kmn} := W_{kmn} \cdot g \cdot l_k = 9906.93 \cdot kN \cdot m$	Moment about slew ring
Boom Sections;	
$l_{1b} := 23.1m = 23.1m$	Length
$W_{1b} := l_{1b} \cdot W_{jdm} = 18741.69kg$	Weight
$l_{2b} := 14.5m$	Length
$W_{2b} := l_{2b} \cdot W_{jdm} = 11764.27kg$	Weight
$l_{3b} := 14.5m$	Length
$W_{3b} := l_{3b} \cdot W_{jdm} = 11764.27kg$	Weight
$d_1 := 2.5m$	Distance from centroid of tower to start of jib
$M_{b1} := W_{1b} \cdot g \cdot \left(d_1 + l_{3b} + l_{2b} + \frac{l_{1b}}{2}\right) = 7912.3 \cdot kN \cdot m$	Moment caused by removing section 1
$M_{b2} := W_{2b} \cdot g \cdot \left(d_1 + l_{3b} + \frac{l_{2b}}{2}\right) = 2797.67 \cdot kN \cdot m$	Moment caused by removing section 2
$M_{b3} := W_{3b} \cdot g \cdot \left(d_1 + \frac{l_{3b}}{2}\right) = 1124.84 \cdot kN \cdot m$	Moment caused by removing section 3

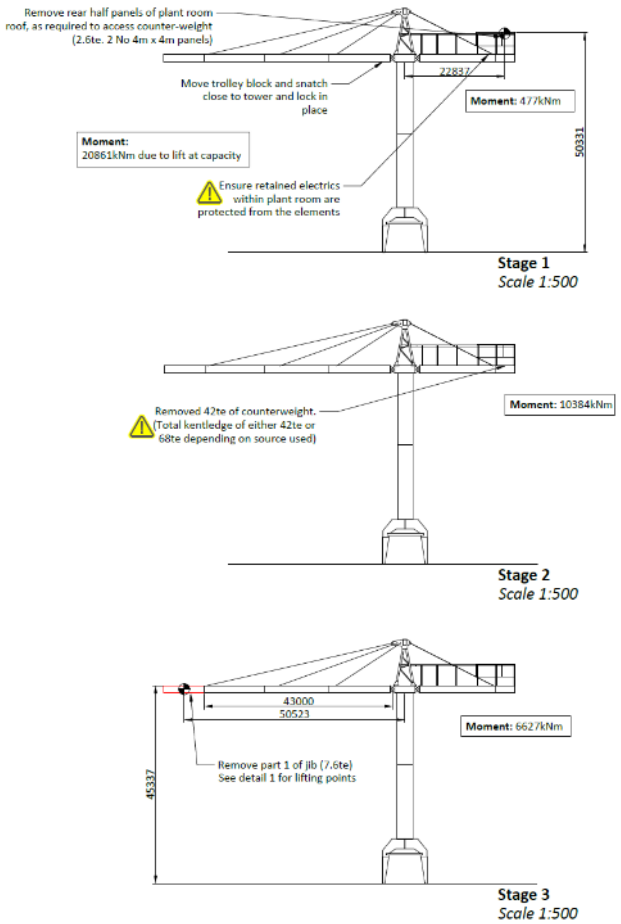

4.4. SECURITY OF AREA

The main CDM work area and Jetty is secured by existing fencing installed by the client.

Where identified, additional Heras fencing is to be installed to enforce pre-determined exclusion zones.

Exclusion zones will be updated as necessary as the project progresses.

Due to the potential hazards associated with the area all access/egress within the CDM demolition area will be strictly prohibited and access will only be granted following prior approval and escort from TDS.

The work areas will be secured against unauthorised access out of working hours and all access/egress points locked.

For demolition of the 'inland' conveyor systems, TDS will install additional Heras fencing as identified below:

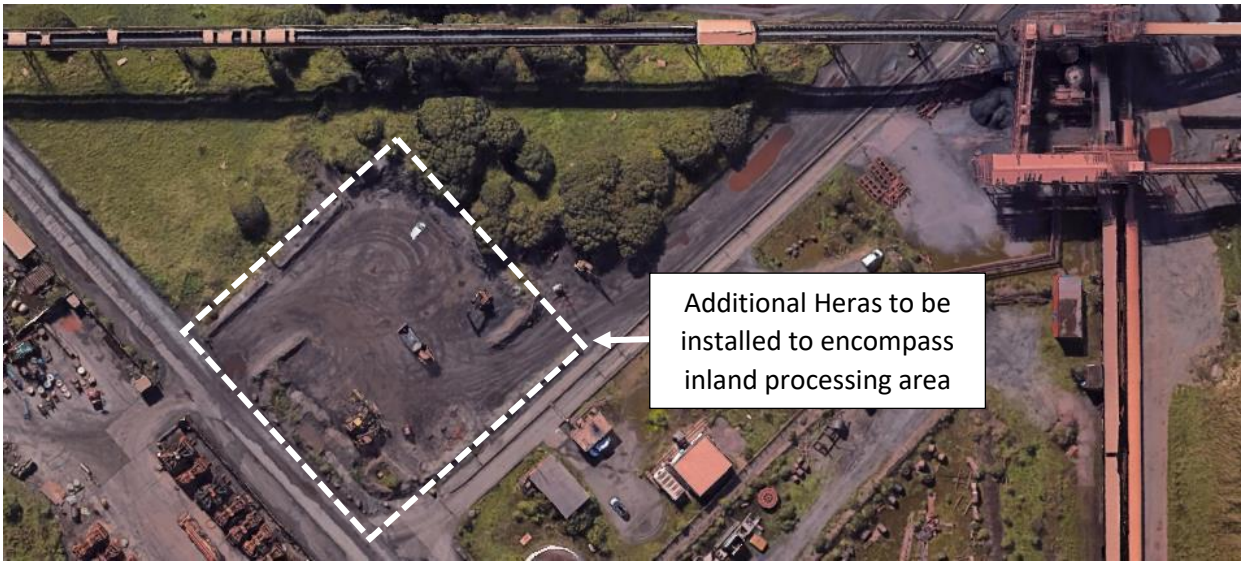

4.5. ASBESTOS REMOVAL

All site personnel will hold current and in-date Asbestos Awareness Training.

All ACM's will be removed prior to demolition and under The Control of Asbestos Regulations 2012.

If at any time during the project, previously unknown suspect materials are discovered, then works will cease immediately and the findings will be reported. The suspect material will then be sampled to confirm/refute the presence of asbestos. If asbestos is detected, then suitable control measures and removal measures will be implemented prior to works re-commencing.

4.6. WORKING OVER THE SEA

Prior to works commencing, TDS will draft and implement our 'Working on, over, in or near water plan'. The following points will be covered as part of this plan and extracts from previous plans can be seen below:

- Definition.
- Responsibilities.
- Objective.
- Legislation.
- Scope.
- Background.
- Hazard(s).
- Maintenance, construction or other high-risk work.
- Working suspended over water.
- Working in/under water.
- Precautions.
- Hazard and risk assessment.
- Rescue procedures.
- Man overboard / accidental entry into water procedure.
- Communication.
- Information & training for people on site.
- Final thought.
- Appendices.

WORKING ON, OVER, IN OR NEAR WATER PLAN

9. BACKGROUND

Activities that require work on, over, in, or near water may include:

- Working close to the water during dismantling works.

10. HAZARD

Any workplace over, on or near water presents a danger that persons might slip or fall into the water, be swept off their feet by wave action, tide action, strong currents or swell from passing water traffic. Adverse weather is also a factor that can increase the danger, and work conditions can change quickly. Whether or not a person is injured by falling in the water, there is an immediate risk of drowning and/or being carried away by water currents.

Precautions must be taken, firstly to prevent persons entering the water and, secondly, if the worst happens, to ensure that they will float and are rescued in the shortest possible time. A standby rescue boat offers rescue in the shortest possible time. It is essential, when working on or near water that safe systems of work are in place based on a thorough risk assessment and that staff are properly trained and instructed.

When working on or near water consideration must also be given to the health implications of falls into the water. The water may be polluted, for example when working near sewage discharge points, and there is the ever-present risk of contracting leptospirosis (or Weil's disease) from water contaminated by rat urine.

Causes of Entry into water

- Falls from height
- Trips, slips, stumbles from low level
- Persons being knocked over by moving objects (e.g. crane loads, vehicles, etc.)
- Loss of balance (e.g. by high winds, sudden boat movements, etc.)
- Failure or absence of edge barriers
- Failure or absence of fall prevention equipment, ropes, lines.
- Floating platforms or vessels sinking.
- Tide action, waves or swell from passing waterborne traffic.

Hazards of Falling into Water

- The most immediate danger is of drowning. Factors that can contribute to this are:
  - Shock from sudden immersion in cold water
  - Weight of waterlogged clothing
  - Life jacket not being worn (or not inflating)
  - Incapacity following injury – caused by striking an object during a fall, or whilst in the water.
  - Fatigue or hypothermia where rescue is not immediate.

WORKING ON, OVER, IN OR NEAR WATER PLAN

C. **Manoeuvring with an engine**

- To stay as close to the person in the water as possible:
- Throw a heaving line to the person in the water, if in range and haul alongside.
- If not within heaving range - start the engine
- Ensure there are no lines lying loose on deck or over side that could foul the propeller.

D. **Man Overboard / accidental entry into water: The Downwind Approach**

- Approach casualty from downwind and tide.
- Position casualty on port side, head towards the stern of the Rescue Boat.

WORKING ON, OVER, IN OR NEAR WATER PLAN

E. **Man Overboard / accidental entry into water: The Upwind Approach.**

- Approach casualty from upwind Portside to.
- Safety Boat will drift down wind on to the casualty.
- Take care that the Rescue Boat does not get blown over the casualty.

F. **In the water**

- Look for the lifebuoy which may be close by. Remain calm, keep your legs together and restrict movements to stop flushing cold water under your clothing.
- Whatever your situation, conserve your body heat - the greatest threat to your survival is from the cold. Remember in UK waters during winter your ability to assist in your rescue will be greatly diminished after ten to fifteen minutes.
- In rough conditions, turn your back to the waves to keep your mouth and nose clear of spray.
- Tighten up wrist, ankle and neck fastenings of protective clothing to reduce heat loss and the onset of hypothermia. Do not attempt to swim back to the boat for the same reasons.

K. **Recovery**

- Getting the person aboard can be difficult. If you have a boarding ladder and the person in the water is able to help themselves, use it if it is safe to do so. If they are unconscious or exhausted, a form of lifting gear will need to be improvised.
- A short strop used in conjunction with a block and tackle rigged on the end of a halyard would make it easier for a heavy casualty to be brought on board.
- A parbuckle can be improvised by using ropes or nets and the rolling the person out of the water.
- Prevention is better than cure. Ensure that all actions and safety precautions to prevent a person overboard / accidental entry into water have been taken and undertake practice drills regularly in all weathers and conditions - You could save someone's life.
- Vertical Lift - Helm and crew turn the casualty to face away from the Safety Boat. Grasp the casualty under their arms, and lift.

WORKING ON, OVER, IN OR NEAR WATER PLAN

L. **How to attract attention in an emergency**

- Carry a portable foghorn and use the whistle fitted to your lifejacket to attract attention if necessary.

M. **Carry!**

- Always carry a tow-rope and ensure you have a strong towing point in the fore end of the boat.
- Carry a first aid kit, a torch and a fully charged mobile phone.
- A first aid kit and basic first aid knowledge can provide invaluable care until professional assistance arrives.
- Keep all your essential small gear in a watertight container.
- Carry an in-date fire extinguisher and a bailer

N. **Be Aware!**

- Keep a good look out at all times and be aware of your surroundings.
- If in doubt, call for help - don't leave it too late!
- Remember - it is easier to find you in daylight than it is in darkness

O. **Emergency Procedures**

- If you should ever find yourself in a situation where you have had to call out the Duty Manager's office / emergency services, there are quite a few ways in which you can assist to make the rescue go as smoothly as possible.
- The points covered by these guidelines are worthy of consideration, should such a position arise.

P. **Clothing/Lifejackets**

- If you are in an emergency situation, ensure all crew members are wearing lifejackets and that they are all properly secured. Put on warm clothing and headgear in case you end up in the water during the rescue operation. This should be done as soon as possible as you may become too busy as the situation develops.

Site Management to monitor visibility levels to ensure they are acceptable. If visibility falls below 200m make operation safe, STOP operation and contact AP.

4.7.2. EXCESSIVE GLARE

Suitable anti-glare glasses will be available for use and should be used. If any personnel have obstructed vision due to glare then STOP and contact AP.

4.7.3. HIGH WINDS

If wind speed is above the maximum m/s monitor every 10 minutes, ensuring any gusts are recorded, if there is any doubt that the operation can be completed, STOP and contact AP.

4.7.4. EXCESSIVE HEAT

Temperature to be monitored. If exceeding 40 deg C, operation to cease. If any personnel are experiencing overheating then STOP and consult AP.

4.7.5. ELECTRICAL STORMS

Level 1 warning (>76% chance of lightning within a 15-mile radius) identifies a higher risk factor and likelihood of electrical storms in the locality. All cranes may continue, however, the decision to suspend lifting operations based on the weather being experienced across the site, will be made by the Crane Supervisor in attendance of the lifting operation.

Level 2 warning (56% to 75% chance of a lightning strike in the area (15 mile radius) identifies increased levels of risk but below the level 1 threshold. The weather conditions will be continuously monitored for any further deterioration.

Level 3 warning (<55% chance of lightning within a 15-mile radius) no immediate action required.

4.8. VIBRATION & HAVS

Prior to works commencing, TDS to implement robust vibration & HAV's procedure documents. Examples can be found below.

Example HAVS assessment

Example reciprocating saw to be used (or similar)

	Hilti WSR 36-A		Makita DJR186Z
Power:	36V Battery	Power:	18V battery
Weight:	4.36Kgs	Weight:	3.65Kgs
Strokes per minute:	2850 max	Strokes per minute:	2,800 max
Noise Level:	101 dB(A)	Noise Level:	95dB(A)
Vibration Level:	13.8 m/s2	Vibration Level:	13.8 m/s2
Steel/metal cutting blade system		Steel/metal cutting blade system	

Input into HSE exposure calculator using 1 hour per operative derived from the following:

- Determine the number of cuts for the creation of the access windows and round up
- Consider these are one location per event

- Assessment made on:
    - 10 minutes per cut anticipated considering construction to be encountered
    - Timing to be confirmed and recorded
- Gives 40 minutes total cut time at each location based on:
    - 10 minutes per side of the access window opening
- 2 operatives assigned per location gives 20 minutes each maximum
- Round up for safety comfort to 25 minutes per operative per location
- Performed at 1 location during working day
- This equates to <1 hour for both operatives combined, per working day (25 minutes each)

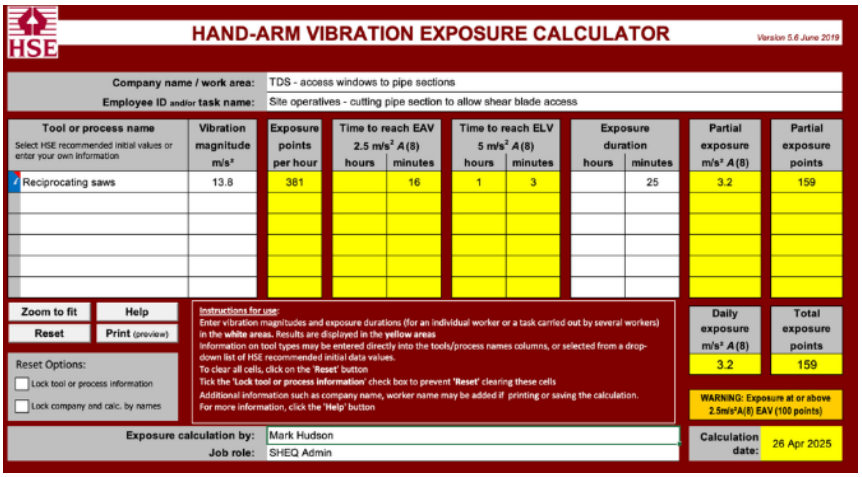

HSE

HAND-ARM VIBRATION EXPOSURE CALCULATOR

Version 5.6 June 2019

Company name / work area: TDS - access windows to pipe sections

Employee ID and/or task name: Site operatives - cutting pipe section to allow shear blade access

Tool or process name (Select HSE recommended initial values or enter your own information)	Vibration magnitude m/s²	Exposure points per hour	Time to reach EAV 2.5 m/s² A(8) hours	Time to reach EAV 2.5 m/s² A(8) minutes	Time to reach ELV 5 m/s² A(8) hours	Time to reach ELV 5 m/s² A(8) minutes	Exposure duration hours	Exposure duration minutes	Partial exposure m/s² A(8)	Partial exposure points
Reciprocating saws	13.8	381		16	1	3		25	3.2	159

Zoom to fit | Help | Reset | Print (preview)

Reset Options:
- Lock tool or process information
- Lock company and calc. by names

Instructions for use:
Enter vibration magnitudes and exposure durations (for an individual worker or a task carried out by several workers) in the white areas. Results are displayed in the yellow areas
Information on tool types may be entered directly into the tools/process names columns, or selected from a drop-down list of HSE recommended initial data values.
To clear all cells, click on the 'Reset' button
Tick the 'Lock tool or process information' check box to prevent 'Reset' clearing these cells
Additional information such as company name, worker name may be added if printing or saving the calculation.
For more information, click the 'Help' button

Daily exposure m/s² A(8)	Total exposure points
3.2	159

WARNING: Exposure at or above 2.5m/s²A(8) EAV (100 points)

Exposure calculation by: Mark Hudson

Job role: SHEQ Admin

Calculation date: 26 Apr 2025

Using the ready reckoner as a check against the formula we get the following results for the type of equipment to be used using the nearest figure. In this case it is the higher value of 14:

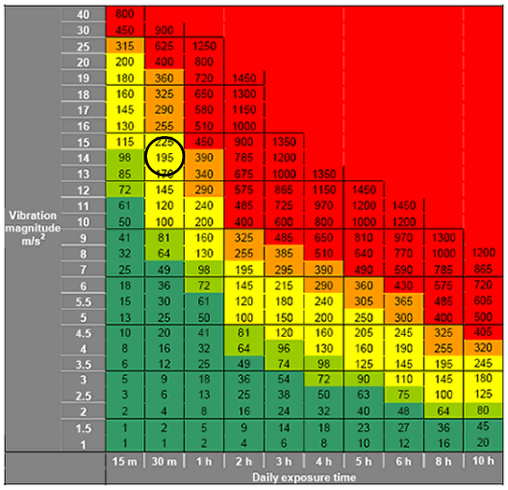

Vibration magnitude m/s²	15 m	30 m	1 h	2 h	3 h	4 h	5 h	6 h	8 h	10 h
40	800									
30	450	900								
25	315	625	1250							
20	200	400	800							
19	180	360	720	1450						
18	160	325	650	1300						
17	145	290	580	1150						
16	130	255	510	1000						
15	115	225	450	900	1350					
14	98	195	390	785	1200					
13	85	170	340	675	1000	1350				
12	72	145	290	575	865	1150	1450			
11	61	120	240	485	725	970	1200	1450		
10	50	100	200	400	600	800	1000	1200		
9	41	81	160	325	485	650	810	970	1300	
8	32	64	130	255	385	510	640	770	1000	1200
7	25	49	98	195	295	390	490	590	785	865
6	18	36	72	145	215	290	360	430	575	720
5.5	15	30	61	120	180	240	305	365	485	605
5	13	25	50	100	150	200	250	300	400	500
4.5	10	20	41	81	120	160	205	245	325	405
4	8	16	32	64	96	130	160	190	255	320
3.5	6	12	25	49	74	98	125	145	195	245
3	5	9	18	36	54	72	90	110	145	180
2.5	3	6	13	25	38	50	63	75	100	125
2	2	4	8	16	24	32	40	48	64	80
1.5	1	2	5	9	14	18	23	27	36	45
1	1	1	2	4	6	8	10	12	16	20

Daily exposure time

	Above limit value
	Likely to be above limit value
	Above action value
	Likely to be above action value
	Below action value

This gives a reading as shown above of 195 at 30 minutes of use so falls in the above action value.

EAV control measures to be introduced consist of:

- Reduce use by design.

- Cut sequence is in one location so make sure to allow rest if needed.
- Rotate personnel.
- Use correct gloves to keep hands warm.
- Ensure breaks are taken.
- Monitor trigger times and record on HAVS register.

4.9. SCRAP PROCESSING PROCEDURES

TDS will establish dedicated scrap laydown and processing area(s) for project duration. The majority of scrap can and will be processed utilising the excavator shears along with supplementary hot-works for larger elements.

Exclusion zones and no personnel areas will be enforced and maintained throughout.

During all plant activity, there will be a banksman present with constant communication channels and strict working areas enforced within the existing exclusion zone.

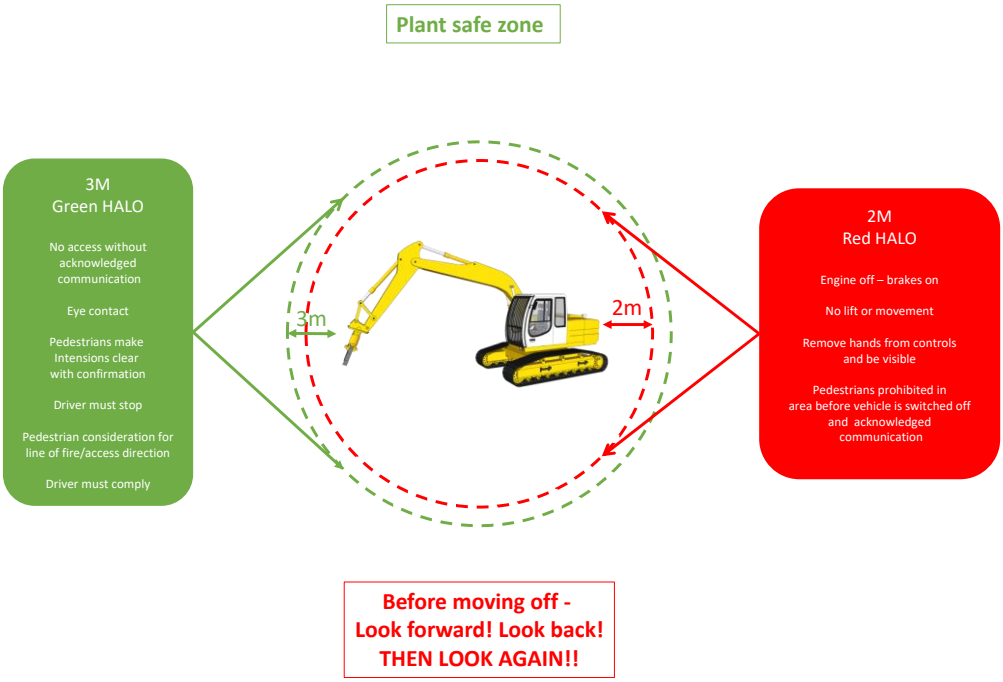

All scrap metal arisings will be transferred to the laydown and processing area and processed to suitable size for loading.

Loading of scrap arisings will be carried out by mechanical means, utilising the excavator + magnet attachment.

4.10. MATERIAL STORAGE & LAYDOWN

As identified above, this area will become the laydown/processing area.

TDS will establish this as a ring-fenced area with strict control measures in place.

The majority of scrap metal arisings will be transferred oversize to this area, from the jetty for further processing to the required size.

Localised stockpiles will be created in preparation for loading out.

4.11. TEMPORARY WORKS PROCEDURES

TDS operate a complete Temporary Works Procedure document with key items including:

Technical Demolition Services Limited Temporary Works Procedure

1.0 Introduction

1.1 This procedure is mandatory for all company operations (unless, on a particular project, another Principal Contractor's procedure is to be adopted by agreement). It is the responsibility of the company's Designated Individual (DI) to ensure that this procedure is appropriate and kept up-to-date.

1.2 All temporary works instigated by the company shall be subject to the control procedures contained within this document. This is to satisfy the company's legislative duties - as well as that of its employees - and to enhance the company's health and safety performance.

2.0 Definition

2.1 Temporary works can be defined, broadly, as parts of the works that allow or enable construction of protect, support or provide access to the permanent works and which might or might not remain in place at the completion of the works. Examples include:

- **Earthworks**

  Support to trenches; excavations; temporary slopes and stockpiles; open batters.

- **Structures**

  Concrete formwork; edge protection; falsework; propping and needling; façade retention; shoring; edge protection; access and support scaffolding; temporary bridges; ...ncing;

- **Equipment and Plant Foundations**

  Mortar silo bases; tower crane bases; supports, anchors and ties for construction hoists and mast climbing work platforms; groundworks to provide suitable areas for plant erection, e.g. mobile cranes, piling rigs and MEWPs; outrigger pads; site cabin foundations; site access and haul roads; and hard standing for plant and material storage.

2.2 It is also necessary to consider permanent works that are part-built or under temporary loading conditions. This includes deteriorated, damaged or part-demolished structures as well as those that are under construction and/or being structurally refurbished. In all these cases these structures may not - without suitable temporary works - be able to support themselves, let alone additional construction loadings.

3.0 Appointment of Key Personnel

3.1 The company shall appoint a Designated Individual (DI). This shall be the Director responsible for health and safety[1]. A formal appointment shall be made by the Managing Director with the agreement of the board.

Name of Designated Individual (DI):

.....

3.2 For each project, a Temporary Works Co-ordinator (TWC) shall be appointed formally by the DI (see **Form No. 1**). One person may be appointed to more than one project if resources and project size permit. These appointments shall be displayed on the project office noticeboard or other prominent location and recorded in the Construction-phase Health and Safety Plan.

NOTE: The TWC may be nominated by the project manager (or other person(s) responsible for resourcing).

3.3 In the event of the company being contracted to undertake work for another contractor – who may be a Principal Contractor – the company's project TWC should liaise with their TWC. **The Principal Contractor's TWC shall have overall control on temporary work.**

3.4 For each project, where required, one or more Temporary Works Supervisors (TWS) shall be formally appointed by the TWC (see **Form No. 2**). The TWS shall normally be the foreman in charge of a team of tradespersons or operatives. At least one TWS shall be based on site at all times. All company TWSs report to the company TWC. The lines of responsibility, on each project, should be set out in an organogram (see **Form No. 3**).

3.5 The Temporary Works Designer (TWD) shall be nominated by the TWC on evidence that the designer has appropriate experience and engineering qualifications if required. There shall be a single point of contact established and maintained between the TWD and the TWC. The TWD shall, as required, liaise with the Principal Designer (under CDM2015) and Permanent Works Designer (PWD), e.g., structural engineer.

3.6 The Temporary Works Design Checker (TWDC) shall be nominated by the TWC on evidence that the design checker has appropriate experience and engineering qualifications if required. The TWDC shall be independent from the TWD (see **Annex A**).

3.7 On each project, a record of appointments should be maintained by the TWC (see **Form No. 4**).

4.0 Roles and Responsibilities

4.1 Designated Individual (DI)

The DI is responsible for establishing and maintaining a procedure for the control of temporary works used during the company's operations; as well as the appointment of TWCs (and their on going training).

4.2 Temporary Works Co-Ordinator (TWC)

Any TWC is responsible to the company Designated Individual (DI) for the implementation of the company temporary works procedure, as well as the appointment of TWSs (where required).

NOTE: They may have a different line manager.

4.3 Temporary Works Supervisor (TWS)

Any TWS is responsible to the Temporary Works Co-Ordinator for ensuring the as-built temporary works comply with the design requirements during construction, use and dismantling. A TWS should be competent in the area of temporary works that they are supervising.

NOTE: They may have a different line manager.

4.4 Temporary Works Designer (TWD)

Any TWD is responsible for preparing a design in accordance with the design brief.

4.5 Temporary Works Design Checker (TWDC)

Any TWDC is responsible for ensuring the design is safe, fit for purpose and complies with the design brief. Four 'design check categories' shall be used; see **Annex A** (and Table 2, BS 5975: 2019[2]).

4.6 Permanent Works Designer (PWD)

Any PWD is responsible for designing the permanent works and assisting the Contractor on matters relating to the intended construction method(s). Under the CDM Regulations 2015, they must provide information on the assumed construction sequence and significant residual risks.

4.7 Principal Designer (PD)

The designer appointed under Regulation 5(1)(a) of the Construction (Design and Management) Regulations 2015 to perform specified duties in Regulations 11 and 12.

SOURCE: Construction (Design and Management) Regulations 2015[3]

5.0 Identification of Temporary Works

5.1 At pre-contract stage on each project, a Temporary Works Register shall be prepared (see **Form No. 5**). This shall include initial, basic information on the envisaged temporary works and the level of 'construction risk' assigned thereto.

Technical Demolition Services Limited Temporary Works Procedure

5.2 The 'construction risk' categories are:

Table 5.2 – Construction risk

Operation (Examples)	Who may sign a permit-to-work:
Low	TWS
Medium	TWC TWS, with TWC prior approval in writing
High	TWC, with DI input where required

NOTE: 'Construction risk' includes 'use'.

5.3 On contract award, the Temporary Works Register shall be passed to the TWC who shall develop and maintain it. It shall be considered as a 'live' document, be updated on a regular basis and the current version displayed on the project office noticeboard (or other prominent location).

5.4 A unique identification number should be assigned to each item in the Register.

5.5 The BS 5975 Design Check Categories 0, 1, 2 and 3 (see **Annex A**) shall be assigned to each item by the TWC.

6.0 Design Brief

6.1 Following consultation with all relevant parties, including the PWD (where required), the TWC shall ensure that a Design Brief (see **Form No. 6**) is prepared for each item in the Temporary Works Register. The brief shall contain sufficient information to permit the TWD to prepare an appropriate solution that meets the project's requirements.

6.2 A single design brief may apply to more than one similar item in the Temporary Works Register.

6.3 The Design Brief item number should accord with the item number in the Temporary Works Register.

6.4 The TWC should sign to confirm the content of any Design Brief prior to it being issued to the TWD.

7.0 Temporary Works Design

7.1 All items of temporary works identified on the Temporary Works Register should be designed by a competent person/company responsible for the design and/or specification of each item.

7.2 The design should comply with the requirements of the Design Brief and be delivered to the TWC in a format appropriate to enable the temporary works to be constructed in accordance with the TWD's intentions.

7.3 Any TWD has duties under CDM2015 and must identify hazards and reduce as far as reasonably practical the associated risks. Residual risks shall be clearly noted on any design drawings and brought to the attention of the TWS by the TWC.

7.4 A risk assessment should be produced to supplement the safe system of work and method statement.

7.5 'Standard solutions', e.g., one where a supplier has published technical data showing arrangements of their equipment, shall be adopted wherever possible and appropriate (See BS 5975: 2019). Any use limitations should be clear, e.g., design responsibility for ensuring stability.

7.6 The TWC should request a Design Certificate from the TWD (see **Form No. 7**).

8.0 Temporary Works Design Check

8.1 All items of temporary works identified in the Temporary Works Register should have assigned a competent person or Company who is responsible for the checking of the design and/or specification of each item.

8.2 The independence of the design checker to the designer shall be as set out using the BS 5975 Design Check Categories 0, 1, 2 and 3 (see **Annex A**) and as agreed with the TWC.

8.3 The temporary works design shall be checked for concept, adequacy and compliance with the Design Brief.

8.4 Evidence of a satisfactory design check shall be recorded in the TWC's Project File.

8.5 The TWC should request a Design Check Certificate from the TWDC (see **Form No. 8**).

9.0 Temporary Works Inspection

9.1 Prior to installation, all temporary works materials are to be inspected for suitability by the TWS.

9.2 As works progress, the installation is to be inspected by the TWS and/or TWC until complete and ready to use.

9.3 Any alterations or deviations to the design should be identified to the TWC, by the TWS, for subsequent consultation with the TWD and/or PWD.

9.4 A record of inspections shall be completed by the TWS and/or TWC (see **Form No. 9**).

10.0 Hold Points (and Permits-to-Work)

10.1 Hold points shall include inspections, loading, proceeding, putting into use or dismantling any temporary works (as appropriate). A permit-to-work (see **Form No. 10**) shall be signed and issued by the TWC (or by the TWS, if the TWS has been so authorised in writing: see **Table 5.2**). Each permit must be signed by the authorised signatory and retained in the TWC's Project File. A copy may be appropriately displayed.

*NOTE: For **high-risk** work, the TWC may not delegate the signing of a permit-to-work to the TWS.*

10.2 The permit-to-work identification number should accord with the item number in the Temporary Works Register.

10.3 The permit-to-work shall clearly indicate the extent of its application and any date/time constraints. All relevant design drawing references, risk assessments and method statements should be included on the permit. A unique identification number should reference the relevant design brief(s) and the item(s) in the Temporary Works Register.

10.4 At the TWC's discretion, a single permit-to-work may be issued for multiple, identical operations - covered by the same design - on the basis that each operation is appropriately checked/inspected prior to the operation commencing.

11.0 Temporary Works Training Requirements

11.1 Any TWC and TWS should have current CITB Site Safety Plus TWC (2-day) and TWS (1-day) certificates, respectively.

11.2 Other training should be identified, e.g. SMSTS, SSSTS, etc. (see **TWI Information Sheet No. 2**).

12.0 Auditing of Temporary Works procedure

12.1 The DI shall arrange for formal audits on the application of this procedure to ensure compliance and effectiveness within the business.

12.2 Issues identified shall be recorded in writing and remedial action implemented.

12.3 The frequency of audits shall be identified by the DI.

Frequency:

.....

Technical Demolition Services Limited Temporary Works Procedure

ANNEXES:

Annex A	Design check categories
Annex B	TYPICAL - Project timeline

FORMS:

Form No. 1	Appointment of a Temporary Works Co-ordinator (TWC)
Form No. 2	Appointment of a Temporary Works Supervisor (TWS)
Form No. 3	Organogram - Lines of responsibility (Typical)
Form No. 4	Record of Project Appointments
Form No. 5	Temporary Works Register
Form No. 6	Design Brief
Form No. 7	Design Certificate
Form No. 8	Design Check Certificate
Form No. 9	Record of Inspection
Form No. 10	Permit-to-work

4.12. PPE / RPE REQUIREMENTS & PROCEDURES

TDS will issue and maintain a stock of PPE/RPE on site throughout the project. This includes but is not limited to:

Mandatory minimum site PPE Requirements:

Item of PPE / RPE	Icon	Required
Safety Helmet/Hard Hat (with chin strap) (BS EN 397 or BS EN 14052)		☒
Hi-Viz with reflective strips (vest/jacket - antistatic/flame retardant) (BS EN 471)		☒
Safety Boots/footwear (antistatic and with midsole protection) (EN ISO 20345 BS EN 345-1)		☒
Gloves (task specific) (BS EN 388)		☒
Glasses (approved LEP) (BS EN 166 minimum F grade)		☒
Coveralls (flame retardant that cover arms and legs) (EN ISO 11612)		☒

Additional identified site PPE/RPE required by risk assessment:

Additional items of PPE/RPE defined by work specific risk assessment	Icon	Required
Hearing Protection (BS EN 352-1)		☒
Disposable RPE (BS EN 149 FFP3)		☒
Airflow helmet/visor (burning) (BS EN 166 & EN 397)		☒
Burning gauntlets (BS EN 407)		☒
Burning hood / balaclava EN ISO 11612 (A1, B1, C1, F1), EN 1149 -5		☒

5. ENVIRONMENTAL / ECOLOGY / CONTROLS

TDS will work in accordance with a site specific Demolition Environmental Management Plan which includes (but is not limited to) the following information:

DOCUMENT STATUS 3
INTRODUCTION 4
1.1 BACKGROUND 4
1.2 PROJECT DESCRIPTION 5
1.3 SITE HISTORY 5
1.4 SITE DESCRIPTION 5
1.5 ENVIRONMENTAL SEARCHES 6
1.6 SENSITIVE RECEPTORS 7
1.7 SITE CONTACT(S) 9
MANDATORY ENVIRONMENTAL REQUIREMENTS 10
1.8 ENVIRONMENTAL MANAGEMENT PLAN 10
1.9 IDENTIFIED ENVIRONMENTAL HIGH RISKS / HAZARDS 10
1.10 OBJECTIVES 10
1.11 THE EMP DEFINES HOW: 11
1.12 IMPLEMENTATION SCHEDULE 11
1.13 LEGAL REQUIREMENTS 11
1.14 ROLES & RESPONSIBILITIES 11
1.15 COMMUNICATIONS 12
1.16 EMERGENCY PREPAREDNESS 13
1.17 MONITORING ACTIVITIES 13
1.18 NON-COMPLIANCE, CORRECTIVE & PREVENTATIVE ACTION 14
PARTICULAR ENVIRONMENTAL REQUIREMENTS 14
1.19 PLANNING AND PREPARATION STAGE 14
1.20 ENVIRONMENTAL ASPECTS AND IMPACTS 14
1.21 WASTE MANAGEMENT 14
1.22 TRAFFIC MANAGEMENT 15
1.23 NOISE MANAGEMENT 15
1.24 DUST 15
1.25 AIR POLLUTION 15
1.26 INTERFERENCE WITH DRAINS, SPRINGS AND WATERCOURSES 16
1.27 FUEL AND OIL STORAGE 16
1.28 HYDROLOGY AND AQUATIC RESOURCES 16
1.29 ECOLOGY 16
1.30 LANDSCAPE AND VISUAL 17

5.1. ENVIRONMENTAL ASPECTS

The key environmental sensitivities associated with the demolition activities are listed below:

- Noise and Vibration;
- Air Quality;
- Drainage and water course pollution;
- Ground pollution;
- Fuel and substance storage and management;
- Landscape and visual;
- Ecology;
- Waste lorry haul routes through community areas;
- Quality of life for the local community and community relations;
- Energy and water use.

5.1.1. EVALUATING SIGNIFICENCE OF ENVIRONMENTAL ASPECTS AND IMPACTS

The procedure for evaluating how significant the identified environmental aspects and impacts are was applied only to those aspects and impacts over which TDS has control or influence.

The significance of the environmental aspects and impacts shall be determined by applying the following screening questions:

- Is the aspect and impact controlled by legislation (implemented or pending)?
- Is the aspect and impact governed by TDS policy and or performance standards?
- Is the aspect and impact governed by other requirements?

If the answer is yes to any of the above, then the aspect and impact is significant.

5.1.2. PRIORITISATION OF SIGNIFICANT ENVIRONMENTAL ASPECTS AND IMPACTS

The following table should enable a priority score to be assigned for every aspect and impact. E.g. A1 would be a low risk and therefore low priority environmental aspect and impact whereas D3 would be a high risk and therefore high priority environmental aspect and impact. Priority scores will then influence the timing for managing the environmental aspect and impact.

Likelihood of occurrence	Certain Constantly in normal conditions	4				
	Likely Intermittent in normal conditions e.g. monthly or weekly	3				
	Occasional Possibly may occur e.g. annually. May be due to staff or equipment failure	2				
	Unlikely To occur, no evidence of occurring, extreme situations only	1				
			A	B	C	D
Severity of consequences		Scale & Impact	Minimal reversible. Environmental impact Reversible in 1 month	Minor pollution. Short-term localised impact reversible in 1 year.	Moderate pollution. Short term implications not reversible in 1 year, complaints.	Major pollution. Long-term global impacts Irreversible Impacts health/ toxic etc.
		Legal/ Policy/ Other		Policy/ performance standard aspiration	Potential breach of regulations	Actual breach of regulations
		Business Issues Litigation/ clean-up costs	Potential for minimal loss (£s)	Potential for minor loss (£'s)	Potential for moderate loss (£'s)	Potential for major loss (£'s)
		Reputation		Potential for internal complaint/ non conformance	Potential for external complaint	Because of breach actual serious complaint/ PR issue etc.

Having assigned a priority score for each environmental aspect and impact the following table suggests timeframes for managing different priority environmental aspects and impacts (actual timeframes should be agreed with process owners):

	Risk	Action	Timeframe
	High	Short Term	Within 2 months
	Medium	Medium Term	Within 6 months
	Low	Long Term	1 year +

5.1.3. COMPILING ENVIRONMENTAL OBJECTIVES AND TARGETS

Environmental objectives and targets shall be set to enable improvements in environmental performance and or improvements to the environmental management system.
Objectives and targets shall reflect the findings of the previous steps within this procedure i.e. they should be set to address significant aspects and impacts and reflect the results of the prioritisation.
Where targets have been set, they shall be specific and measurable. That is, they should be quantified or qualified and linked to indicators that can be used to measure performance; they should include timescales for action and personnel assigned to them.

5.2. ENVIRONMENTAL SEARCHES

TDS have reference the existing site layouts and will use this information to carry out an environmental search of the area using the following website.

http://www.magic.gov.uk/magicmap.aspx

These are to be compared to the findings of the Client/Principal Designer.

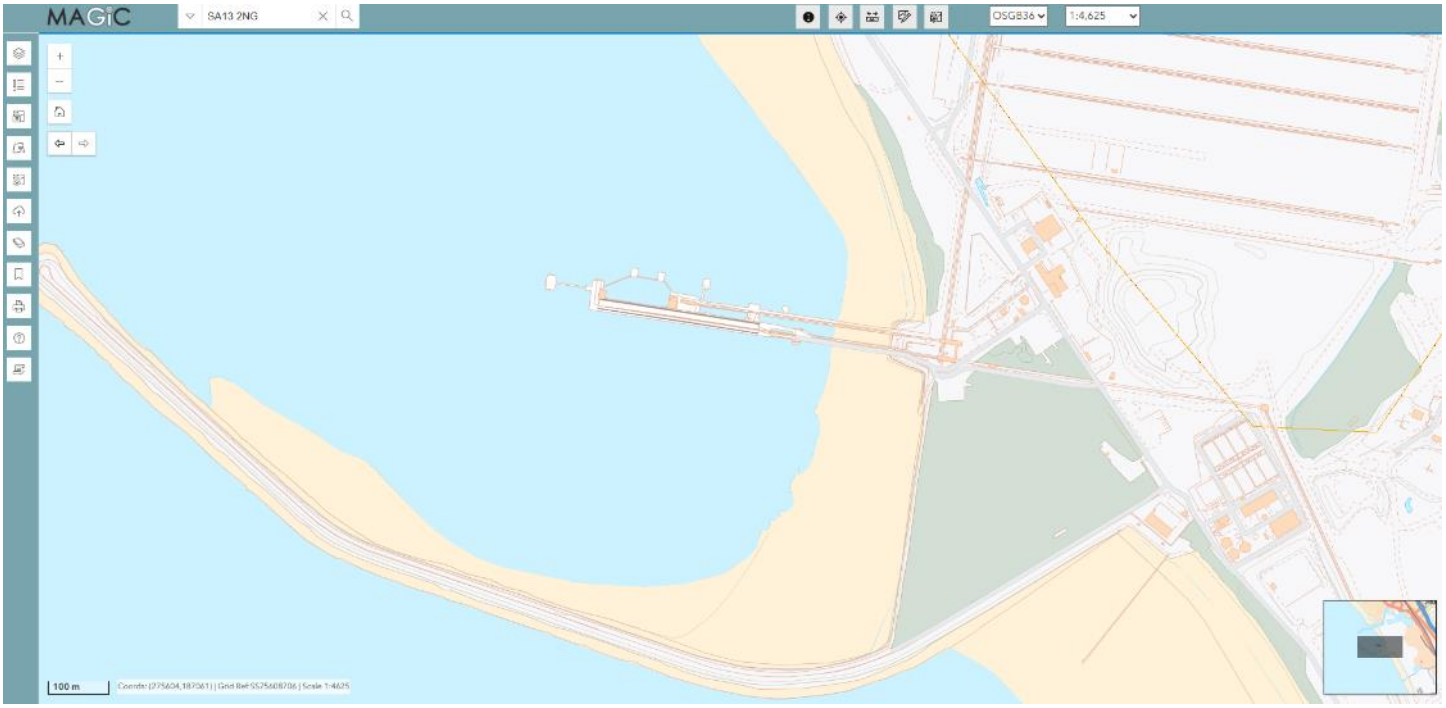

5.3. DUST, NOISE & VIBRATION POLLUTION / CONTROLS

TDS will monitor and report the following:

- Noise – no elevated levels due to current site operations and activities associated with the works – to be monitored at boundary to comply with local conditions.
- Dust from work – no elevated levels produced by site operations anticipated due to the proposed reduction methods and control of the works
- Vibration – no elevated levels considering current site operational activities
- Fire & associated smoke – minimal when hot cutting and can be controlled within CDM area
- Odour – occasional potential for odour if trapped material is released – can be controlled
- Light – no transfer of light to adjacent operations or users.
    - Plant and task lighting present to local working areas
- Litter – to be maintained through housekeeping
- Mud on roads (site & public) can be managed within CDM area

5.3.1. DUST

TDS will minimise dust emissions during all stages of the project. Control mechanisms will be implemented to reduce disruption and nuisance to surrounding areas.

TDS will use water misting—applied via pressure washer, bowser, or hose with a misting spray head—to suppress dust during the demolition of concrete or brick structures, as well as during the processing of concrete. Water mist will also be used to dampen all arisings during sorting and loading operations. Care will be taken to avoid flooding working areas, and both water use and surface run-off will be strictly controlled and managed. Only water mist will be used to ensure effective dust suppression without generating excessive surface run-off.

Any necessary drains within the site boundary will be sealed or bunded using a Drain ProTector drain sock (or equivalent). These will surround the drains to trap silt, sand, and debris—preventing them from entering the drainage system while still allowing water from dust suppression and rainfall to pass through, thereby avoiding site flooding.

Mechanical demolition will occur within a designated exclusion zone, with only the plant operator present. The operator will keep all cab doors and windows closed during operations.

All wagon and skip loads will be sheeted prior to transport.

The roads leading to and from the burdening work area will be kept clean and free from mud, dust, and debris at all times and will be subject to regular inspection.

The Site Manager, along with visiting Health & Safety personnel and members of the senior management team, will conduct routine inspections around the site to identify any excessive or unreasonable dust build-up from specific tasks and will implement additional control measures where necessary.

TDS will observe on-site speed limits to minimise dust generated by vehicle movements.

An integrated noise, dust, and vibration monitoring system will be installed to allow real-time, continuous monitoring of site conditions. Background levels will be recorded prior to the commencement of works and used as a benchmark against ongoing monitoring throughout the project. Monitoring reports will be generated and included in the contractor's reporting as well as the Health & Safety File, where required. A monitoring station will be positioned at the edge of the work site boundary adjacent to sensitive receptors and will be relocated as necessary, in line with the phasing of works.

Although BS 5228-1:2009+A1:2014 provides guidance on noise and vibration control, it does not cover dust level thresholds. TDS will therefore refer to recognised industry standards—specifically the Institute of Air Quality Management (IAQM) guidance—to define appropriate dust limits for this project, in close consultation with the Client and the Principal Designer. A commonly accepted dust deposition limit of 200mg/m^2/day will be applied. While this threshold is typically used in conjunction with passive monitoring (e.g. Frisbee gauge), the real-time system employed on this site will provide live feedback, allowing faster identification of exceedances and implementation of responsive mitigation measures.

If agreed dust levels are exceeded, the monitoring system will automatically trigger an alert to the site team. Works will cease immediately to allow for a reassessment. Existing control measures will be reviewed, and activities will be replanned with additional controls in place. Work will resume under continued monitoring to ensure that the adjustments have been effective.

Dust control will be managed in accordance with TDS's ISO-certified business management systems, associated policies, and safe working procedures. TDS will also comply with the applicable recommendations and requirements of the IAQM guidance and BS 5228-1:2009+A1:2014. Compliance will be monitored by the Site Manager and Project Manager, with further audits and inspections carried out by TDS's EHS Department and Compliance Officer, alongside inspections by the Client and Principal Designer as required.

5.3.2. NOISE

TDS identifies how they manage noise impacts including:

- Those activities likely to generate noise
- The levels of noise likely to be generated
- The mitigation measures to be adopted

TDS are to limit noise levels, so far as reasonably practicable, so that adjacent operations and all other sensitive receptors are protected from excessive noise and vibration levels arising from the site activities.

TDS will adhere to the applicable recommendations and requirements of IAQM Standard and BS5229-1:2009+A1:2014 Code of Practice for Noise and Vibration on Construction and Open-sites. BS 5229-1:2009+A1:2014 is a British Standard that serves as a code of practice for noise and vibration control on construction and open sites, focusing specifically on noise (Part 1). It provides guidance on noise assessment, control measures, and impact evaluation, helping to protect people living and working near these sites.

An integrated noise, dust & vibration monitoring system will be installed to allow real-time continuous monitoring. Background levels will be documented prior to work commencing and compared to the real-time monitoring as works progress. Reports will be generated and provided as part of the TDS report and the H&S file, as required.

A monitoring station will be set up at the immediate edge of the work site boundary adjacent to any sensitive receptors. The provisions will be moved as works progress or as required, in line with the working sequence. If agreed levels are exceeded an alert will be issued by the monitoring system to the team without delay. Works will immediately halt for re-assessment. Works will then be reviewed, with any additional control measures etc implemented prior to work re-commencing under continuous monitoring to ensure that improvement has been successful.

5.3.2.1. NOISE MITIGATION

Demolition works are proposed to be undertaken during periods identified with an 'X' within the table below:

Task Description	Core Hours*	Evenings and Weekends**	Public Holidays**
Demolition with Excavator with Hydraulic Hammer Attachment	X		
Demolition without Excavator with Hydraulic Hammer Attachment	X	X	X

Notes:

* 07:00 – 19:00 Monday – Friday, 07:00 – 13.00 Saturday

**19:00 – 20:00 Monday – Friday, 13.00 – 20:00 Saturday, 07:00 – 20:00 Sundays and Public Holidays

The working pattern for contractors will be:

- Week 1: Monday – Sunday
- Week 2: Monday – Friday (early finish to enable travel from site)

No works outside the permitted hours will be undertaken without the permission of the local planning authority.

Noise Mitigation:

- Temporary services will be powered by screened, silent run generators. The work equipment will be fitted with mufflers and silencers where possible. TDS operate a hybrid power system for site welfare with the battery running approximately 80% of the time. This reduces localised noise and also provides environmental benefits.
- Wagon and plant engines will be turned off when not in use.
- All plant and equipment will be subject to daily inspection and robust maintenance to reduce noise emissions.
- Low impact methods of demolition will be applied where possible (e.g. use of shear and rotating grab attachment). Each work package area will be controlled as an exclusion zone, to prohibit access to all but essential persons.
- Works generating levels in excess of 80dBA will be highlighted using warning signs. All works producing noise in excess of 85dBA and above will be conducted within a hearing protection / exclusion zone.
- Barriers and signage will be used to differentiate these areas and access will only be approved to persons essential for the work task. Hearing protection will be worn by the operator and all others within the work area (Verishield VS120 and VS130H Ear Defenders with SNR of 32 & 35dB).

5.3.3. VIBRATION MITIGATION

TDS envisage minimal impacts from vibration, however, the following mitigation measures will be implemented:

Vibration Mitigation (including in the marine environment)

- Temporary services will be powered by screened, silent run generators to reduce nuisance vibration. Wagon and plant engines will be turned-off when not in use. All plant and equipment will be subject to daily inspection and robust maintenance to reduce nuisance vibration.
- Whole body vibration will be strictly controlled through the provision of air seats and dampening mechanisms in the demolition plant. Annual health surveillance is in place to monitor the workforce. Plant and equipment will be maintained to a high standard throughout works in accordance with our integrated management system procedures, accredited to ISO 9001:2015.
- An integrated noise, dust and vibration monitoring system will be installed to allow real-time continuous monitoring. Reports will be generated and provided as part of the contractor's report and the H&S File, as required.
- Where vibratory hand tools are used then a system of monitoring and worker rotation will be put into place. Operatives will wear gloves to keep their hands warm."

5.4. WATER / OIL / FUEL SPILLAGES / REFUELING

All storage of oil, including diesel, in containers with a capacity of 200 litres or over will comply with The Water Resources (Control of Pollution) (Oil Storage) (Wales) Regulations 2016. All storage and refuelling will take place away from sensitive receptors (surface and foul drains) and be undertaken in a designated fenced off area and on hard standing areas wherever possible. Oils and lubricants brought site will be stored either in the back of the bunded tank or on a drip tray inside a locked metal store. Spill kits will be positioned around the site and at designated refuelling points.

Hazardous substances are to be stored in accordance with the COSHH Regulations, with appropriate Assessments derived from available MSDS information, for the use and storage of the materials. A register is to be kept and maintained. TDS will adopt similar requirements for other chemical substances. As a minimum, other chemicals are sited on an impervious base and provided with secondary containment (110% of the volume of the largest container which it contains or 25% of the aggregate amount stored, whichever is the greater).

The contents of all storage containers are to be clearly marked. The locations of spill kit materials are to be clearly signed.

TDS ensures that refuelling of mobile plant is carried out in a designated area, preferably on an impermeable surface and away from any drains. TDS will make spill kits available nearby. TDS ensures that hoses and valves are regularly checked for signs of wear and that they are turned off and securely locked when not in use. Diesel pumps and similar equipment are to be placed on drip trays to collect minor spillages. TDS checks these regularly and any accumulated oil is removed for disposal.

5.4.1. SPILL MANAGEMENT & PREVENTION – GENERAL

5.4.1.1. SPILL PREVENTION

The procurement of chemicals, greases, lubricants and fuels etc is to be managed such that only sufficient quantities are purchased for the intended planned work scope and time allocated.
Avoid the supply of materials in large volumes and, where possible, purchase smaller pack items to minimise the potential impact should a spill occur.
Bulk volume, such as fuel, must be in suitable bunded container with 110% capacity storage with suitable spill kits available at source.
A database of substances will be held on site with appropriate MSDS/COSHH assessments present.

5.4.1.2. POTENTIAL SOURCES

Known potential sources are:

- Diesel fuel (plant, equipment & transport)
- Hydraulic oil (plant & equipment)
- Engine oil (vehicles including transport)
- Greases (plant & equipment)
- Propane (during hot cutting)
- Oxygen (during hot cutting)

5.4.1.3. SPILL CONTROL

5.4.1.3.1. FUEL AND OIL STORAGE

All storage of oil, including diesel, in containers with a capacity of 200 litres or over will comply with the respective Regulations.
All storage, and refuelling, will take place away from sensitive receptors (surface and foul drains) and be undertaken in a designated fenced off area and on hard standing areas wherever possible.
Oils and lubricants brought site will be stored either in the back of the bunded tank or on a drip tray inside a locked metal store.
Spill kits will be positioned around the site and at designated refuelling points.

Hazardous substances are to be stored in accordance with the COSHH Regulations, with appropriate Assessments derived from available MSDS information, for the use and storage of the materials. A register is to be kept and maintained.
Similar requirements will be adopted for other chemicals substances. As a minimum, other chemicals are sited on an impervious base and provided with secondary containment (110% of the volume of the largest container which it contains or 25% of the aggregate amount stored, whichever is the greater).
The contents of all storage containers are to be clearly marked.

The locations of spill kit materials are to be clearly signed.
It is ensured that refuelling of mobile plant is carried out in a designated area, preferably on an impermeable surface and away from any drains. TDS will make spill kits available nearby.
The TDS ensures that hoses and valves are regularly checked for signs of wear and that they are turned off and securely locked when not in use.
Diesel pumps and similar equipment are to be placed on drip trays to collect minor spillages.

The TDS checks these regularly and any accumulated oil is removed for disposal.
Depending on nature of the potential spill sources / areas (i.e. quantity, physical and chemical characteristics), the spill kits may contain the following:

- Absorbent pads, pillows, socks
- Hydrophobic spill booms, of suitable size and length, to contain any spill in water
- Absorbent material (i.e. granules) to absorb spills to the ground
- Dustpan/ brooms & shovel
- Drain cover(s)/sandbags
- Spilled material container / drum / bags
- Suitable PPE/RPE and neoprene gloves etc
- Warning tape.

Site plant and equipment is also available to facilitate spill response and clean-up if required.

5.4.1.3.2. SPILL RESPONSE

The primary steps to be followed are:

1. Assess the spill – make sure area safe and assess the nature of the spill
2. Notify the spill response coordinator – give clear detail about the location, type and local area etc
3. Identify the spill – consult any information, implement correct PPE/RPE measures
4. Evaluate the spill – can it be managed by site personnel or is external assistance required
5. Stop – ideally at source by turning off any hoses/valves, putting containers back upright, putting leaking item into a larger non leaking container, sealing damaged area etc
6. Contain – if the spill can't be stopped at source, contain it wherever possible using absorbent materials, granules, rolls or sausage/socks etc
7. Prevent the spill from spreading – particularly to watercourses/drains etc by covering grates, using sausage/sock or boom (hard or flexible type)
8. Clean up the spill – dependent upon the type, suitable media to absorb and handle collected spill items
9. Disposal – ensure the correct waste stream is determined

5.4.1.3.3. FIRST ACTIONS IN ALL INSTANCES

- Evaluate the spill hazard – to you, others locally and the environment
- Evacuate and establish cordons
- Isolate source of material as soon as possible
- Raise the alarm to Site Manager/spill management coordinator

5.4.1.3.4. ENVIRONMENTAL OBSERVATIONS

- Location of pollution receptors and status – High, Medium or Low
- Assess types of spill kits required
- Location spill kits where required in relation to identified hazard
- Consider spill kit ease of access and use in any event

- Include product / fuel storage inventory

5.4.1.3.5. OIL / CHEMICAL / HAZARDOUS SUBSTANCE SPILLAGE

- Stop work immediately and refer to product type
- Put on PPE/RPE as appropriate/defined COSHH/MSDS
- Find the source of the pollution if not already known
- Take immediate action to reduce or stop the pollution and contain the spillage
- Refer to site layout plan to find out where pollution could possibly lead to
- On land use earth/sand/suitable material to construct a bund around the spill to stop it spreading
- Use booms to contain oil spills that have already entered a watercourse
- Use the spill kits to clean up the spillage (i.e., use the absorbent granules/pads in the spill kits to mop up spills)

5.4.1.3.6. SPILL KIT PROVISIONS

- Suitable spill kits to be placed within the CDM area.
- Equipment will include:
    - Oil booms when working close to water
    - Oil absorbent rolls or pads
    - Oil absorbent granules
    - Chemical absorbent pads/rolls
    - Supply of sand & bags
- Trained individuals how to use and how to dispose
- Appropriate means of handling and disposal through existing site waste management
- Periodically test and record effectiveness of drill

5.4.1.3.7. HANDLING & DISPOSAL OF COLLECTED SPILL KIT MEDIA

Dependent on the size, type and volume of contained spillage, there are to be differing actions taken accordingly:

- Small spillage (up to 25 litres):
    - Normally contained with granules for small release event
    - Collect spillage and absorbent media into a suitable pile
    - Gather and load into a suitable bag/heavy duty sack
    - Label and hand to Company / Contractor to dispose through existing site waste management strategy
    - Check locally affected area and confirm reinstatement/cleanliness
    - Complete incident report and implement findings
- Medium spillage (from 25 to 100 litres):
    - Use correct spill kit for size and type of release event
    - Collect spillage and absorbent media into a suitable pile

- Gather and load into a suitable bag/heavy duty sack
- Label and hand to Company / Contractor to dispose through existing site waste management strategy
- Check locally affected area and confirm reinstatement/cleanliness
- Complete incident investigation and implement findings

➢ Large spillage (over 100 litres):

- Use correct spill kit for size and type of release event
- Contain and collect spillage and containment media
- Gather and load into a suitable receptacle
- Label and hand to Company / Contractor to dispose through existing site waste management strategy
- Check locally affected area and confirm reinstatement/cleanliness
- Complete incident investigation and implement findings
- Inform EA if appropriate and other local operators for watercourse breach

5.5. WASTE MANAGEMENT

5.5.1. WASTE HIERARCHY AND MINIMISATION

TDS will follow a waste hierarchy approach: eliminate, reduce, reuse, recycle, and dispose.
The minimisation of waste and the increased use of recycled materials form an intrinsic key to resource protection.
The waste hierarchy principles to be implemented during the demolition phase are:

- Waste will be, as far as possible, prevented or reduced at source.
- Where waste cannot be prevented, waste materials or products should be re-used directly or refurbished and then re-used on site.
- Waste materials should be recycled or reprocessed into a form that allows them to be reclaimed as a secondary raw material and re-used on site; and
- If waste cannot be prevented, reclaimed or recovered, it will be disposed of in a controlled manner at a suitably licenced facility.

5.5.2. WASTE STREAM(S)

European Waste Catalogue (EWC) code	Waste type	Note
17 09 04	General Waste (including insulation etc)	General waste includes mixed demolition waste or 'Soft Strip' materials (eg, glass, non-contaminated wood, Plastic packing, MMMF, etc) will be produced as the buildings are progressively demolished. General waste also includes communal waste which will be produced from the site office / welfare and canteen facilities. The identified materials will be placed into skips for removal from site at appropriate intervals. The waste will be further segregated at a transfer station prior to final recycle or disposal.
17 01 07	Demolition Arisings (brick & rubble)	During the works, any suitable material such as clean brick or concrete will be separated and will be processed and used as engineering backfill to voids and low points so will, therefore, not be considered a waste.

European Waste Catalogue (EWC) code	Waste type	Note
17 04 05	Ferrous Metals	Ferrous metal will be processed at source and temporarily stockpiled for removal at periodic intervals.
17 04 07	Non-Ferrous Metals	Non-ferrous metals such as Copper, Brass, Aluminium, etc will be processed at source and temporarily stockpiled for removal at periodic intervals.
17 06 05*	Asbestos (Bonded/Non-notifiable)	Where identified in the R&D survey, any non-notifiable Asbestos Containing Materials (ACM's) will be systematically removed from their point of placing, in buildings and structures, and placed in suitable packaging (double wrapped bags/visqueen sheeting) and to clearly identified closed containers or skips. When enough, ie a skip full, has been produced it will be removed from site via licensed carrier to a licensed disposal facility.
20 01 21*	Fluorescent Tubes	Fluorescent tubes will be removed and stored in appropriate containers (eg, tube coffins). When enough have been collected, they will be removed from site by licensed carrier to a licensed disposal facility.
15 02 02*	Oil Contaminated Waste (Solid)	Solid oily waste is potentially to be produced both during de-planting certain process equipment of the plant and as a direct result of the use of absorbent granules, absorbent pads and machine/plant maintenance (e.g. oil filters, etc.). The solid oily waste will be placed into appropriate covered containers for safe storage. When enough has been collected the containers will be removed from site via licensed carrier to a licensed disposal or treatment facility.
13 02 08*	Oil Contaminated Waste (Liquid)	The site has been decommissioned and drained. Oily waste from transformers (where present) or due to plant maintenance will be either loaded into road tankers or temporarily stored in drums or IBCs and will be collected and removed from site via licensed carrier to a licensed recycling facility.
20 01 35*	Hazardous Waste Electrical and Electronic Equipment	Hazardous waste electrical and electronic equipment (WEEE) including sodium lights containing mercury (if present on site) will be removed prior to demolition of the structures and stored in an appropriate covered area until a suitable quantity for economic disposal has been achieved. The resultant waste shall be systematically removed from site via licensed carrier to a licensed processing facility.
20 01 36	Non-Hazardous Waste Electrical and Electronic Equipment	Non Hazardous WEEE will be removed prior to demolition of the structures as far as is practicable and stored in an appropriate covered area until a suitable quantity for economic disposal has been achieved. The resultant waste shall be systematically removed from site via licensed carrier to a licensed processing facility.
16 01 17	Switchgear	Switchgear, electrical cabinets, etc. will be removed from the buildings and structures on site as work progresses. Switchgear will be transported via licensed carrier to a licensed processing facility where it will be split down to its base components/streams for recycling.
16 03 06	Pigeon Waste	An environmental clean and appropriate decontamination of pigeon droppings and carcases from within the buildings and structures shall be carried out for the individual packages. The resultant waste shall be systematically removed from site via licensed carrier to a licensed disposal facility.

5.5.2.1. WASTE STREAM ROUTE PLAN

EWC	Waste	Option	Segregation route
17 09 04	General Waste	Recycle / waste	Remove at regular intervals
17 01 07	Demolition Arisings	Reuse	Reuse to fill low points etc
17 04 05	Ferrous Metals	Recycle	Stockpile & remove periodically
17 04 07	Mixed Non-Ferrous Metals	Recycle	Stockpile & remove periodically
17 06 05*	Asbestos Containing Materials (Non-Notifiable)	Waste	Remove at regular intervals
20 01 21*	Fluorescent Tubes	Recycle	Store & remove from site
15 02 02*	Oil Contaminated Waste (Solid)	Recycle	To be collected for recycling
13 02 08*	Oil Contaminated Waste (Liquid)	Recycle	To be collected for recycling
20 01 35*	WEEE (Hazardous)	Waste	To be collected for disposal
20 01 36	WEEE (Non-Hazardous)	Recycle	To be collected for recycling
16 01 17	Switchgear	Recycle	To be collected for recycling
16 03 06	Pigeon Waste	Recycle	Remove at regular intervals

5.5.3. WASTE MANEGEMENT PROCEDURES

General procedures:

- Waste Tracker will be operated throughout this project.
- Waste produced during all site activities will be subject to the 'Duty of Care' under The Waste (England and Wales) Regulations 2011.
- Waste produced onsite will be disposed of in accordance with legislation.
- The Waste Duty of Care Practice (2018) sets out practical guidance on how to meet waste duty of care requirements.
- A register of waste carriers, disposal site (including transfer stations) and relevant licencing details will be maintained on site.
- As works progress, areas for waste collection and materials delivery and storage will be established and provided within the site boundary.

Waste storage and removal procedures:

- Waste storage areas will be relocated at different stages of the demolition process and multiple areas allotted for the purpose of waste storage/segregation and removal.
- The location(s) of any existing drainage will be considered to ensure there is no run-off or contamination from waste materials.

The following waste management procedures will be implemented:

- All containers for waste storage will be clearly labelled so that users know what wastes can be placed into each container.
- Materials will be removed from site as required and at periodic intervals.
- Stockpiling of materials will be minimised as far as is reasonably practicable.
- Lockable storage will be provided for any hazardous waste.
- All waste containers will be positioned at least 20m away from any watercourses, ditches and other areas of environmental sensitivity.
- Liquid wastes will be stored in containers and stored within a suitable bunded area, or otherwise provided with secondary containment.
- Separate containers will be provided for each type of hazardous waste.

No burning of any waste will be permitted on site or at the site compound/storage areas.

5.5.3.1. NON-HAZARDOUS WASTE MANAGEMENT

Non-hazardous waste will be removed and placed into the skips provided. Non-hazardous wastes will consist of, but not limited to:

- Soft strip materials – MMMF lagging materials.
- Fixtures and fittings.
- Ferrous and non-ferrous materials.
- Waste electronic and electrical equipment.
- Glass.
- Wood.
- Plastic.

All generated waste will be sorted for re-use, recycling or disposal and placed into their respective skips. All non-hazardous waste that is not suitable for re-use on site will be loaded into skips from the registered waste contractor, and once full, transported to a licenced recycling facility or nominated landfill site.

5.5.3.2. HAZARDOUS WASTE MANAGEMENT

All identified hazardous waste will be removed and placed into separate secure and sealed waste skips which will be located within their own designated area on site, which will be restricted from general access through the use of Heras fencing.

Categories of hazardous waste may include:

- Site specific process materials – MSDS provided for all materials used with previous site use.
- Asbestos containing materials – pre-demolition R&D survey to be issued by client/PD.
    - Where ACMs have been identified, these are to be removed prior to demolition.
- Oil/fuel/chemical spill clean-up materials such as spill granules, rags etc.
- Fluorescent light tubes.
- Oily water built up in drips trays etc.
- Any identified or previously unknown Control of Substances Hazardous to Health (COSHH) items.

5.5.3.3. WASTE CARRIERS

All waste generated on the project shall be dealt with in accordance with legal requirements/guidance. Each waste carriers licence details shall be recorded.
The transportation of waste from site will comply with the 'Duty of Care' requirements. This includes ensuring waste is transported by registered waste carriers to appropriately licenced sites for processing or disposal.
When transferring waste offsite, Contractor will ensure that for non-hazardous waste the following is implemented:

- A paper or electronic 'waste transfer note' – WTN's will be completed inline with the relevant legislation/guidance.

For hazardous wastes:

- Hazardous Waste Consignment note – this applies to the movement of all hazardous wastes.
- A Hazardous Waste Consignment note will be completed inline with the relevant legislation/guidance as set out by the Environment Agency.

A full and accurate description of the waste will be provided within the applicable notes. This documentation shall be retained (either paper or electronic) by both parties (i.e. the waste transferrer and the waste transferee); for two years for non-hazardous waste notes and three years for hazardous waste consignment notes.

Prior to the removal of any materials from site, TDS will:

- Ensure that the waste has been identified and classified correctly.
- Ensure the relevant waste documentation is in place, in date and completed correctly e.g. (carriers license, site waste disposal license, driver's license (ADR), consignment note, transfer note, etc)
- Weigh the load and record weights from weighbridge.
- Obtain a release number from Head office.
- Release the load for dispatch.
- WTN or Consignment note will be produced to security as authorisation for waste streams to be removed from site.

5.5.3.4. WASTE DOCUMENTATION DETAILS

All details of waste from site must be accompanied by documentation as detailed above. TDS will ensure that each document contains the following information:

- The name of the person receiving the waste and what they are authorised to do with that waste as a registered waste carrier can only transport waste.
- Type of waste produced.
- The Standard Industrial Classification (SIC) code.
- The six-digit European Waste Catalogue (EWC) number.
- Address of the producing site and details of the waste producer.
- Waste carriers' details including Waste Carriers Licence (WCL) number.

- Quantity of waste.
- How it is contained (e.g. 40-yard skip).
- Address of the receiving site and the environmental permit or exemption number associated with the receiving site.
- The date to which the documentation applies.
- If the material is non-hazardous waste.
- If the material is hazardous, a Hazardous Waste Consignment Note must be provided, and a Hazardous Waste Premises Code must be supplied.
- A declaration that the waste has been treated inline with the requirements of the waste hierarchy.

All documentation will be retained at the main stie office and following completion of the project at the PC's head office, including:

- WMP (2 years after end of project);
- Waste transfer documentation (2 years for WTN's and 3 years for hazardous waste consignment notes);
- Copies of any exemptions or permit; and
- Copies of waste carrier and disposal site licences.

6. OUTLINE METHODOLOGY

6.1. OUTLINE METHOD STATEMENT

Prior to works commencing, TDS will develop a detailed site-specific Method Statement. The below information gives a general overview of the dismantling process and will be supported by detailed engineering studies.

6.1.1. METHODOLOGY GENERAL

- All three unloaders will be piecemeal dismantled utilising the barge + 500 ton crawler crane to carry out main lifts.
- Access at height will be via existing access points/walkways where possible and via MEWP/Man-basket crane.

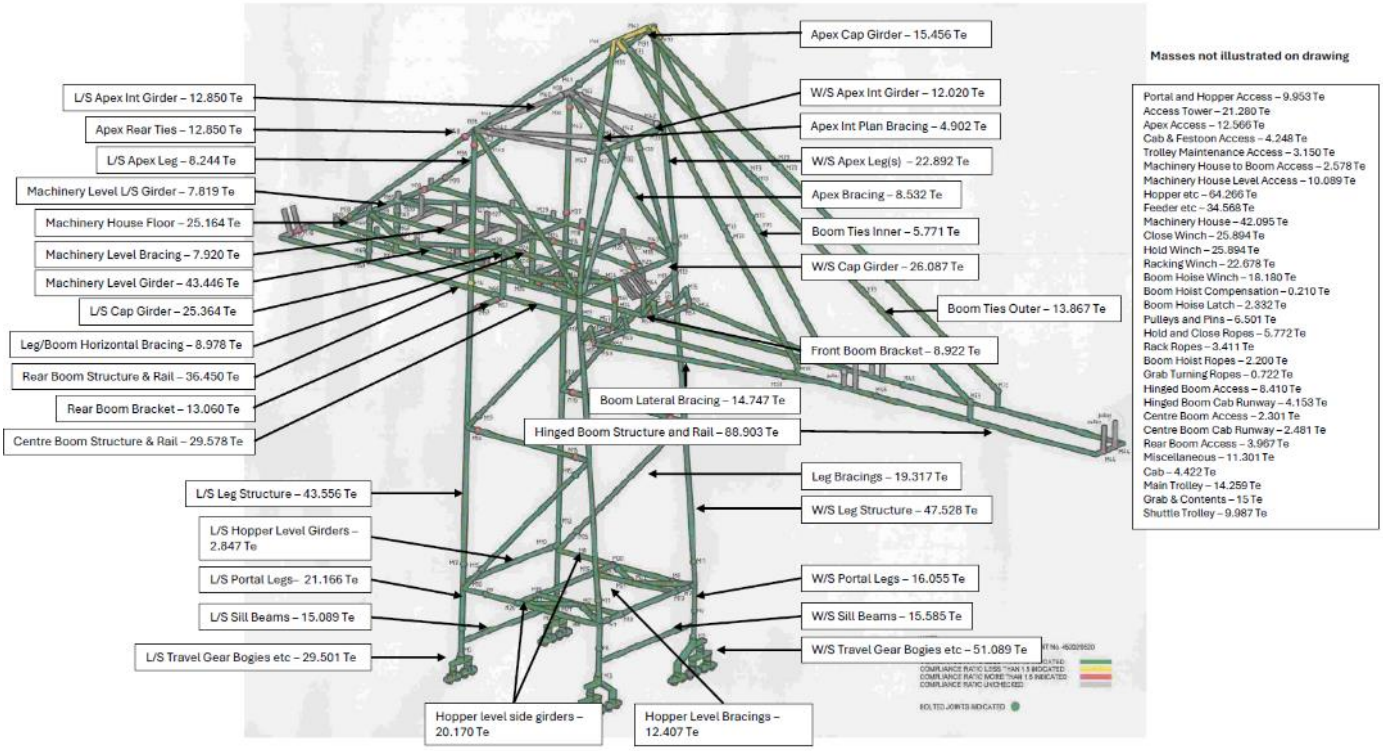

*for illustrative sequence purposes only, pending engineering checks.

Design standards:
- BS5975:2019 Code of Practice for Temporary Works Procedures and the Permissible Stress Design of Falsework.

- BS6187:2011 Code of Practice for Full and Partial Demolition.

Methodology Overview:

The three unloaders would be demolished piecemeal utilising a 500Te crawler crane positioned on a barge. The barge will be positioned and secured in position utilising 30m spudlegs. Studying the surrounding depths, this can be shown as suitable.

The stability of the unloaders must be considered and a safe and suitable demolition sequence developed to ensure the stability of the structure throughout. To achieve this, it is proposed to reduce Water Side (W/S) elements and Land Side (L/S) elements in sequence to maintain stability throughout.

The overturning moment that would be applied by the lifting of the allowable loads can be seen to be acceptable. Provided the applied moment, following the removal of sections, is less than this moment the structure can be seen to remain stable.

Weights will be calculated based on the information available from the as-built drawings and on-site structural checks / 3D modelling of the cranes.

Loads:

The loads applied will be due to the imbalance caused throughout the demolition process. Provided these can be shown to be less than the imbalance in the current (working) state, or during lifts, then the loads can be seen to be acceptable.

Load Path:

The off-centre weight and wind loads are supported by the structural capacity of the members and the balance from the counterweights. The vertical loads are transferred through the structure and into the ground.

Stability:

The imbalance in loads is supported by the existing structure, with the counterweights and structural capacity resisting the overturning loads applied by wind and other live loading.

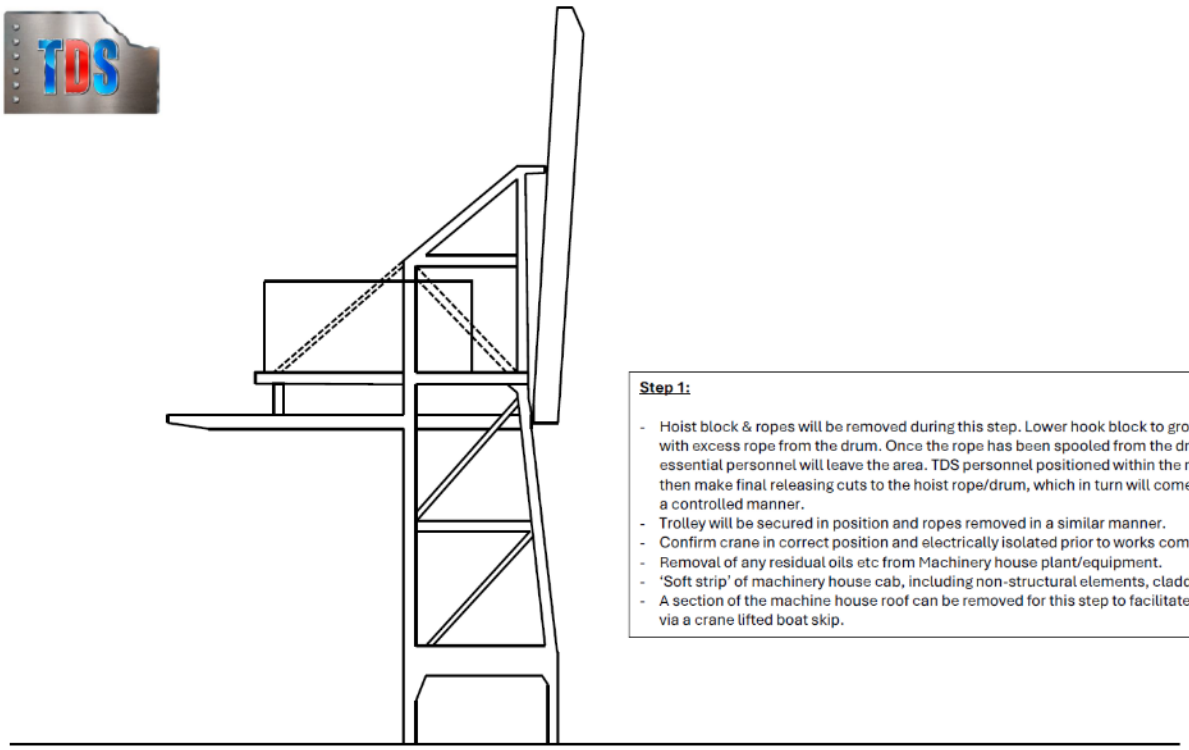

Step 1:

- Hoist block & ropes will be removed during this step. Lower hook block to ground level along with excess rope from the drum. Once the rope has been spooled from the drum, all non-essential personnel will leave the area. TDS personnel positioned within the machine house will then make final releasing cuts to the hoist rope/drum, which in turn will come to ground level in a controlled manner.
- Trolley will be secured in position and ropes removed in a similar manner.
- Confirm crane in correct position and electrically isolated prior to works commencing.
- Removal of any residual oils etc from Machinery house plant/equipment.
- 'Soft strip' of machinery house cab, including non-structural elements, cladding etc.
- A section of the machine house roof can be removed for this step to facilitate material removal via a crane lifted boat skip.

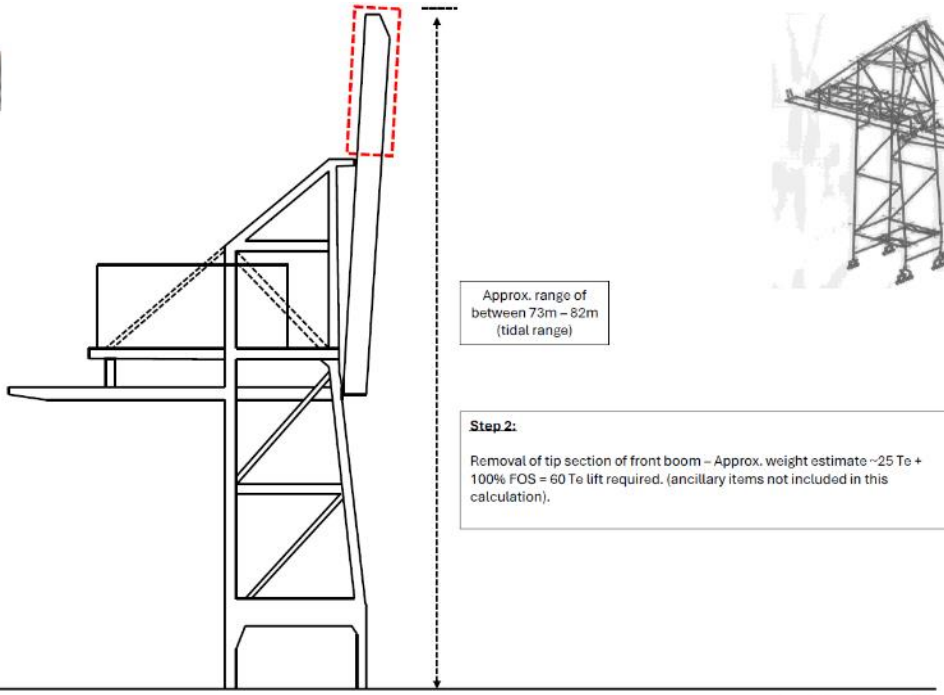

Step 2:

Removal of tip section of front boom – Approx. weight estimate ~25 Te + 100% FOS = 60 Te lift required. (ancillary items not included in this calculation).

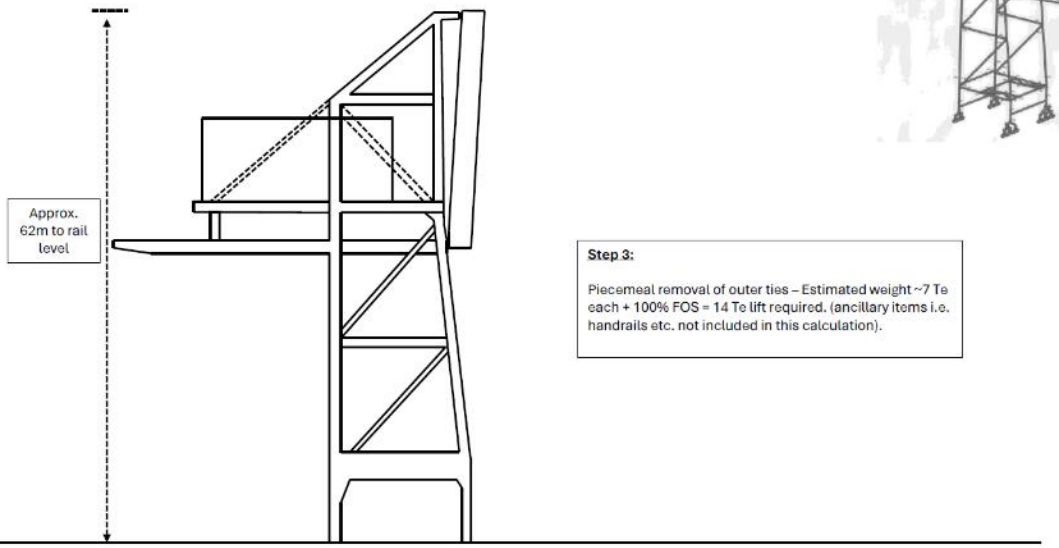

Step 3:

Piecemeal removal of outer ties – Estimated weight ~7 Te each + 100% FOS = 14 Te lift required. (ancillary items i.e. handrails etc. not included in this calculation).

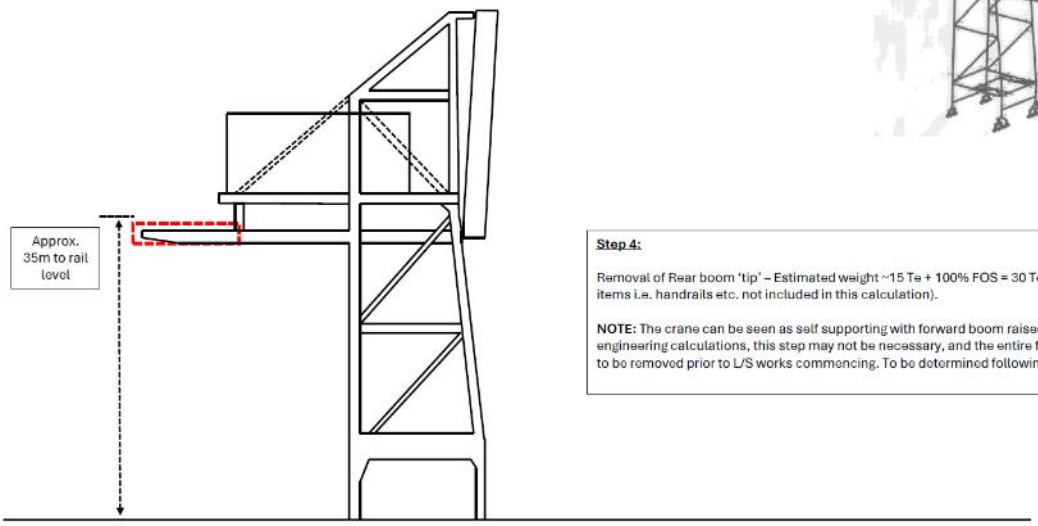

Step 4:

Removal of Rear boom 'tip' – Estimated weight ~15 Te + 100% FOS = 30 Te lift required (ancillary items i.e. handrails etc. not included in this calculation).

NOTE: The crane can be seen as self supporting with forward boom raised, therefore, pending engineering calculations, this step may not be necessary, and the entire forward jib may be able to be removed prior to L/S works commencing. To be determined following COG calculations.

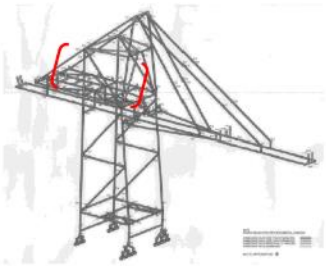

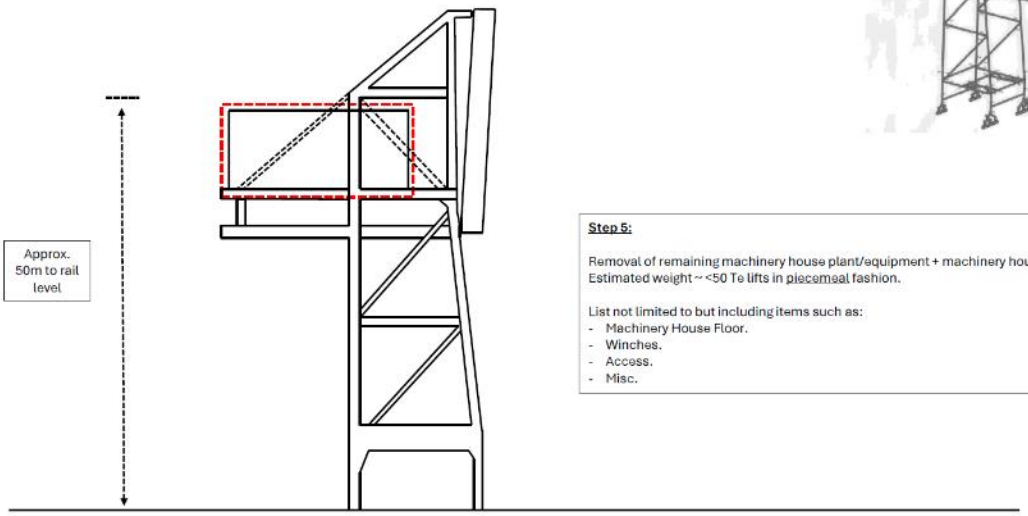

Step 5:

Removal of remaining machinery house plant/equipment + machinery house structure – Estimated weight ~ <50 Te lifts in piecemeal fashion.

List not limited to but including items such as:
- Machinery House Floor.
- Winches.
- Access.
- Misc.

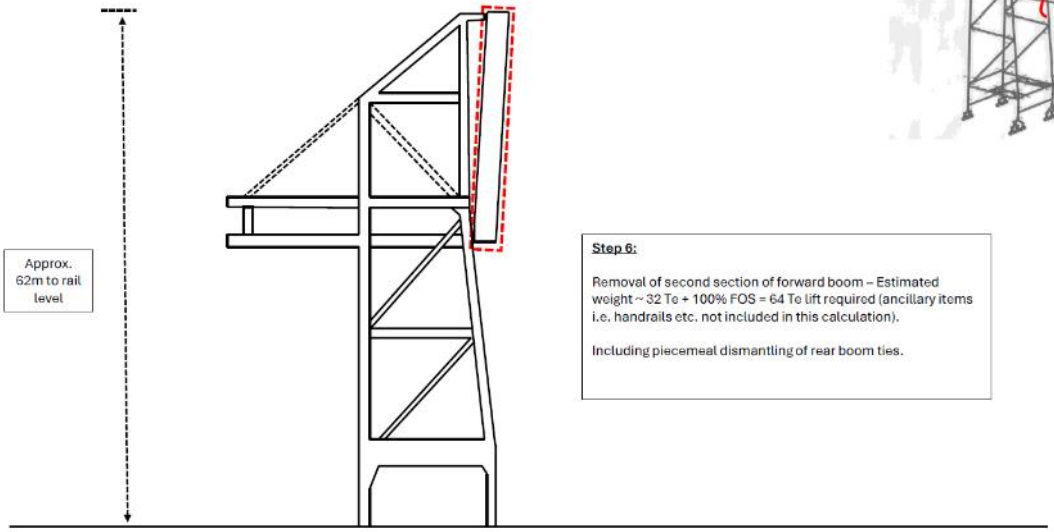

Step 6:

Removal of second section of forward boom – Estimated weight ~ 32 Te + 100% FOS = 64 Te lift required (ancillary items i.e. handrails etc. not included in this calculation).

Including piecemeal dismantling of rear boom ties.

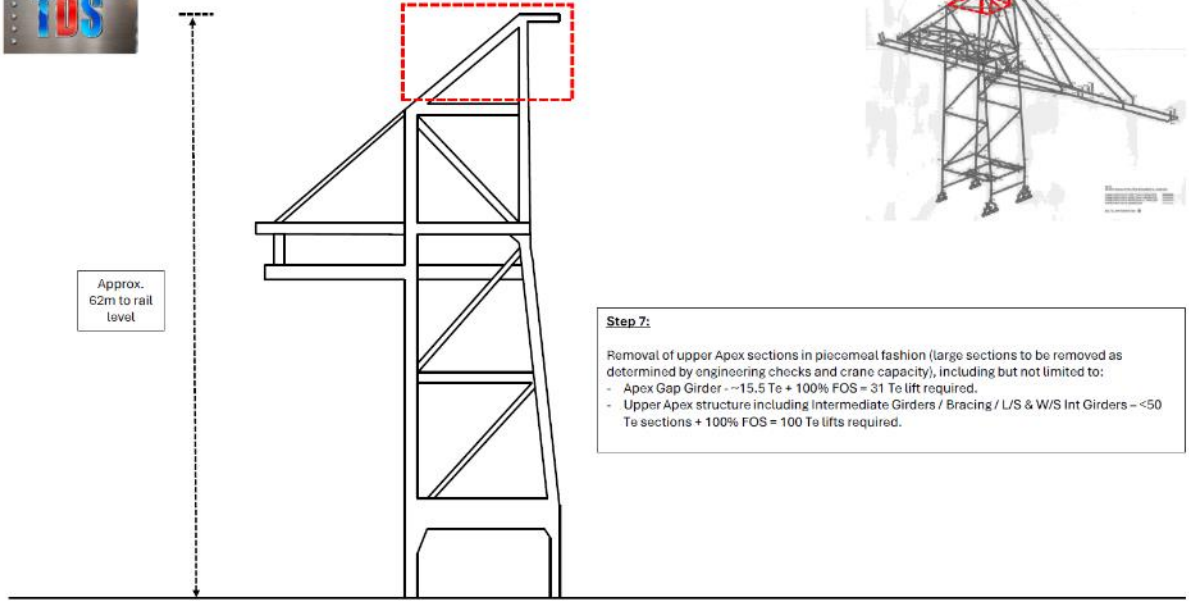

Step 7:

Removal of upper Apex sections in piecemeal fashion (large sections to be removed as determined by engineering checks and crane capacity), including but not limited to:
- Apex Gap Girder - ~15.5 Te + 100% FOS = 31 Te lift required.
- Upper Apex structure including Intermediate Girders / Bracing / L/S & W/S Int Girders – <50 Te sections + 100% FOS = 100 Te lifts required.

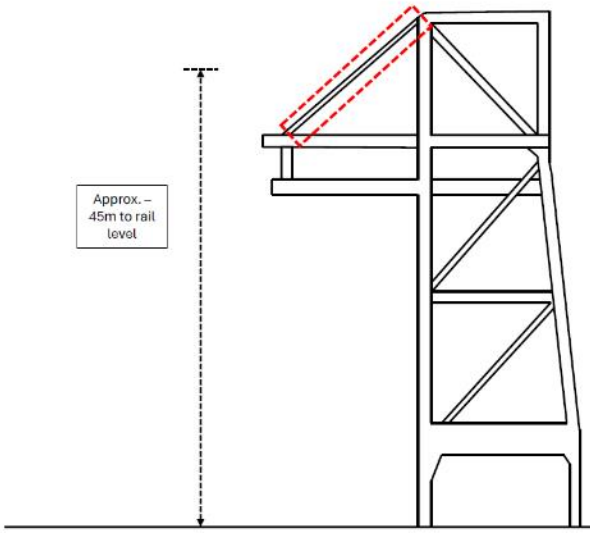

Step 8:

Removal of 'lower' Apex rear ties – Estimated weight ~ 4 Te each + 100% FOS = 8 Te lift required.

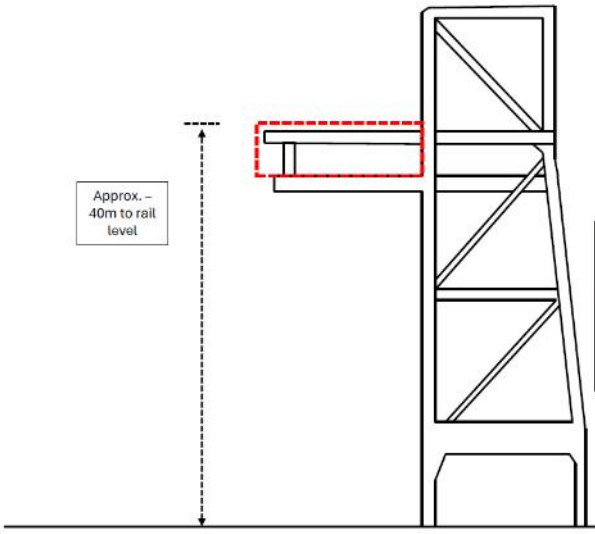

Step 9:

Removal of Machinery House Level structures in piecemeal fashion (large sections to be removed as determined by engineering checks and crane capacity), including but not limited to:

- Machinery House L/S Girder – 8 Te + 100% FOS = 16 Te lift required.
- Machinery House Bracing – 8 Te + 100% FOS = 16 Te lift required.
- Machinery Level Girder – 22 Te + 100% FOS = 44 Te lift required.

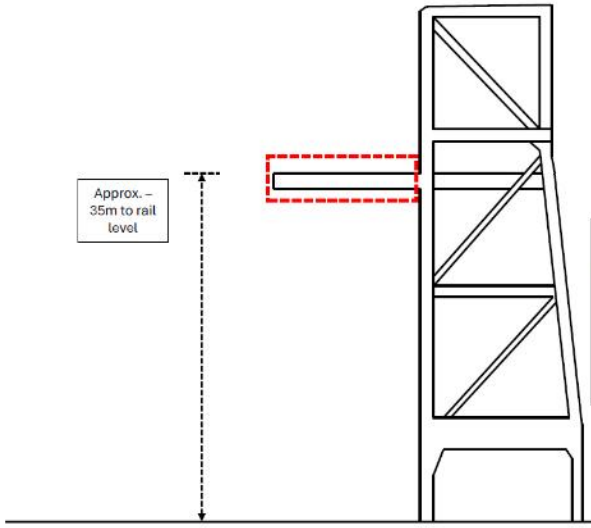

Step 10:

Removal of remaining Rear Boom sections (large sections to be removed as determined by engineering checks and crane capacity), including but not limited to:

- Remaining Rear Boom Structure & Rail Approx. 60% of stated weight – 22 Te + 100% FOS = 44 Te lift required.

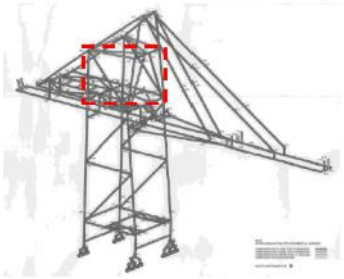

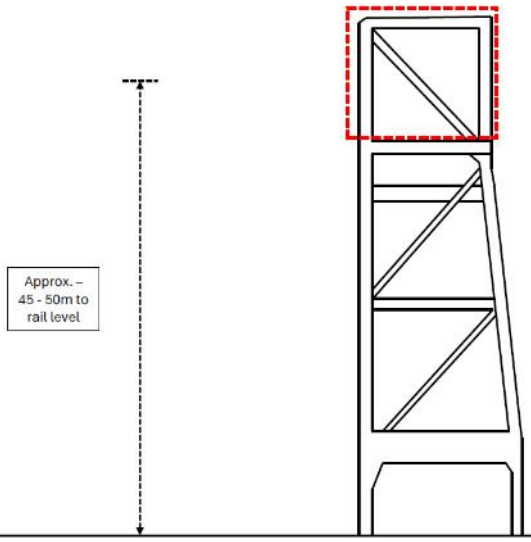

Step 11:

Removal of remaining Apex structure (large sections to be removed as determined by engineering checks and crane capacity), including but not limited to:

- L/S Apex Leg – 8.5 Te + 100% FOS = 17 Te lift required.
- L/S Apex Int Girder - 13 Te + 100% FOS = 26 Te lift required.
- L/S Cap Girder – 25 Te + 100% FOS = 50 Te lift required.
- Leg/Boom Horizontal Bracing – 9 Te + 100% FOS = 18 Te lift required.
- Rear Boom Bracket – 13 Te + 100% FOS = 26 Te lift required.
- W/S Cap Girder – 26 Te + 100% FOS = 52 Te lift required.
- W/S Apex Leg(s) – 23 Te + 100% FOS = 26 Te lift required.
- Front Boom Bracket – 9 Te + 100% FOS = 18 Te lift required.

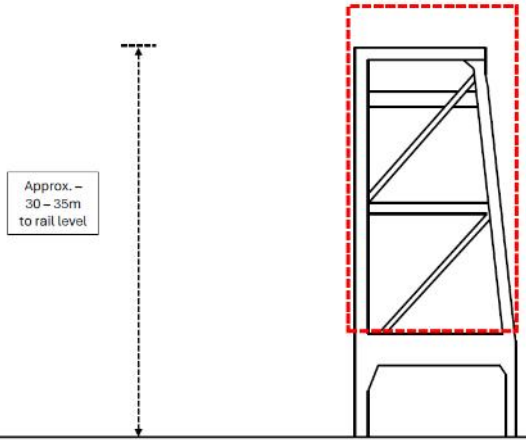

Step 12:

Removal of Leg Structure down to Hopper Level (large sections to be removed as determined by engineering checks and crane capacity), including but not limited to:

- Central Boom Structure & Rail – 30 Te + 100% FOS = 60 Te lift required.
- L/S Leg Structure – 44 Te + 100% FOS = 88 Te lift required (this will be reduced in weight due to piecemeal removal into manageable lengths).
- W/S Leg Structure – 48 Te + 100% FOS = 96 Te lift required (this will be reduced in weight due to piecemeal removal into manageable lengths).
- Leg Bracings – 20 Te + 100% FOS = 40 Te lift required (this will be reduced in weight due to piecemeal removal into manageable lengths).

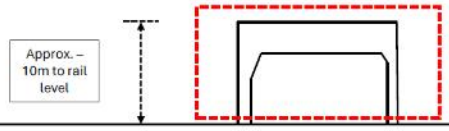

Step 13:

Removal of Hopper Level down to Bogies (Bogies to be chocked and remain in place for separate removal):

- Hopper / Feeder etc to be dismantled in piecemeal fashion.
- L/S Hopper Girders – 3 Te + 100% FOS = 6 Te lift required.
- Hopper Level Side Girders – 20 Te + 100% FOS = 40 Te lift required (this will be reduced in weight due to piecemeal removal into manageable lengths).
- Hopper Level Bracings – 12.5 Te + 100% FOS = 25 Te lift required (this will be reduced in weight due to piecemeal removal into manageable lengths).
- L/S Portal Legs – 22 Te + 100% FOS = 44 Te lift required (this will be reduced in weight due to piecemeal removal into manageable lengths).
- L/S Sill Beams – 15 Te + 100% FOS = 30 Te lift required (this will be reduced in weight due to piecemeal removal into manageable lengths).
- W/S Portal Legs – 16 Te + 100% FOS = 32 Te lift required (this will be reduced in weight due to piecemeal removal into manageable lengths).
- W/S Portal Sill Beams – 15.5 Te + 100% FOS = 31 Te lift required (this will be reduced in weight due to piecemeal removal into manageable lengths).

Following removal of the above item's L/S & W/S Travel Gear Bogies to be removed as separate lifts.

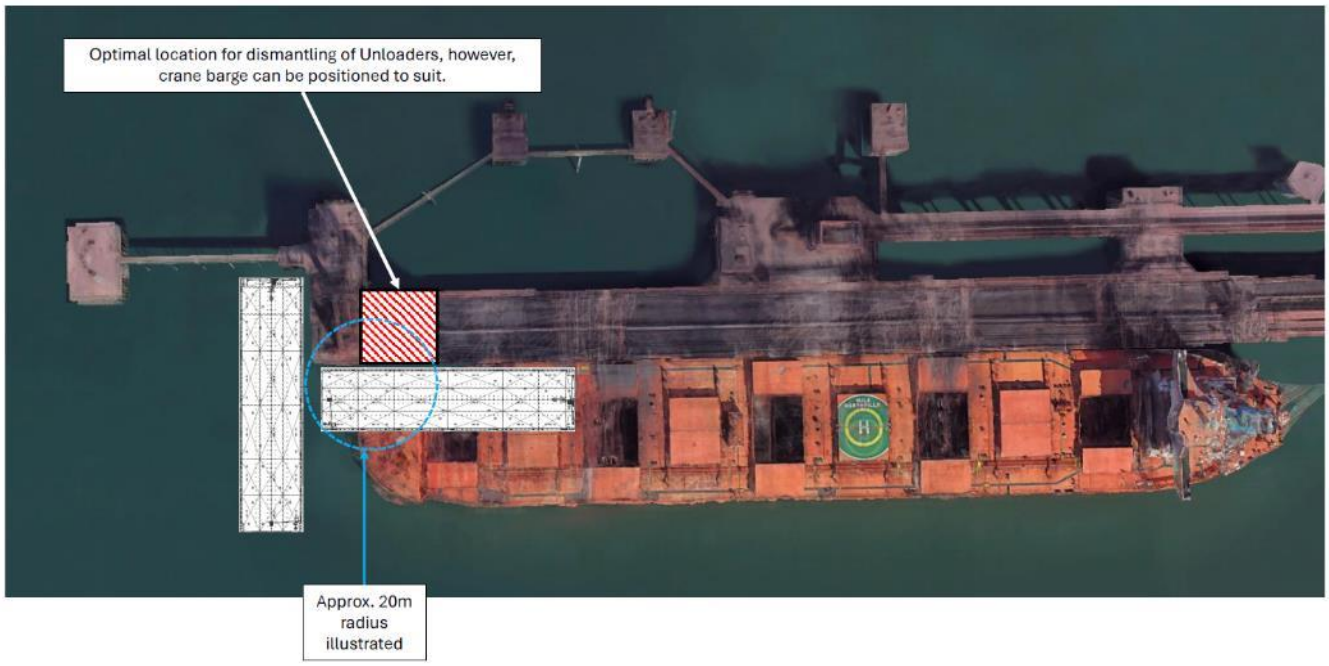

6.2. OUTLINE RISK ASSESSMENT(S)

Qualitative and Quantitative Risk Assessments:

TDS carry out site/task specific Qualitative Risk Assessments on all projects.

Risk Assessments shall identify but not be limited to the following:

- Consider the task
- Consider all hazards
- Conclude a "risk rate factor" prior to implementation of control measures – Likely hood x Severity
- Apply control measures
- Re-evaluate the "risk factor" following control measures suggested (Likely hood x Severity)

The assessment will be as short and concise as possible, but cover all potential risks

- It should be kept in mind that they are in place to inform the operative how he should carry out their task safely
- It should be read, agreed then signed by all parties
- A record of the signature must be kept in the safety file
- The operative must not deviate from that agreed
- Any potential deviations must be agreed, risk assessments changed, then re signed
- A "Control Document" of established and agreed method statements must be completed at all times showing dates and amendments. It should be kept in the site safety file

Work equipment risk assessments:

TDS understand that risks associated with different work equipment differ vastly and as a whole are not generic. For example, the risks involved with the use of a reciprocating saw will be significantly different from the use of a MEWP.

Where required TDS will develop 'work equipment risk assessments' specific to the equipment being worked on.

Almost all equipment used at work is subject to the Provision and Use of Work Equipment Regulations 1998 (PUWER). Some work equipment may also be subject to more specific legislation. TDS ensure all work is carried out to the relevant legislation / guidance.

Compilation of site & task specific Method Statements:

TDS compile site and task specific method statements on all projects carried out. In general, the method statements will contain the following level of detail:

- Description of the works
- Where the activity is being carried out
- Identity of hazards
- PPE
- Existing services
- Risk controls
- Environmental controls

The method statements will be kept as short and concise as possible:

- It should be kept in mind that they are in place to inform the operative how they should carry out their task
- It should be read, agreed and signed by all parties
- A record of signature must be kept
- The operative must not deviate from the agreed method statement
- A 'Control Document' of established and agreed method statements must be completed, showing dates and amendments.

Activity based Risk Assessments:

TDS have previously held an Asbestos licence for over 40 years and as such understand the requirements for activity-based risk assessments and health surveillance, in this case asbestos medicals and personal monitoring.

A number of other activities will lead to health surveillance requirements, including hot-works on potentially lead containing painted surfaces, TDS hot-work operatives have regular 'Lead In Blood' medicals to ensure our workforce is safe in their task.

First Aid 'Needs' Risk Assessments:

TDS carry out a First Aid 'Needs' Risk Assessment. TDS understand that site first aid must be adequate and appropriate in the circumstances, including the provision of sufficient first aid equipment, facilities and personnel at all times.

All our Site Managers & Supervisors are suitably first aid trained and all sites are equipped with appropriate provision of first aid resources.

The assessment will consider the following:

- The nature of work being undertaken
- Site specific hazards and risks
- The nature and size of the workforce
- Work patterns
- Holiday and other absences of first aiders
- Organisations history or pattern of accidents
- Local emergency services and their proximity from site

6.2.1. OUTLINE RISK ASSESSMENT

Severity			Likelihood		
1 Minor accident (First Aid)	2 Major accident (RIDDOR)	3 Fatality	1 Low	2 Medium	3 High

Risk Rating & Control & Monitoring Protocols

1-2: Work may proceed in accordance with agreed TDS policy and procedures	**3-4:** Work may proceed providing stringent control measures have been implemented (e.g. permit to work, monitoring, etc.)	**6-9:** The work cannot commence until alternative method of work or additional control measures implemented

Topic of concern / activity	Identified hazard(s)	Associated risk(s)	Persons at risk	Initial Risk Level		Initial Risk Score	Control measures -existing (engineering / managerial) & Introduced (additional / proposed)	Residual Risk Level		Revised Risk Score	Allowed
				Severity	Likelihood			Severity	Likelihood		
Services	Electricity, gas, oil, water.	Fire, explosion, flooding, electrocution, pollution	TDS Delivery transport supplier	3	2	6	Adherence to Tata specifications/drawings. Localised service to be retained are to be identified and protected where applicable. Banksman present while offloading. Work to sequence. POWRA carried out. Permit to work system to be implemented. Be aware of underground services/pits/pipes etc. Known services adjacent to be clearly identified. Selected live services are to remain within proximity of the working area. These live supplies will not be disturbed during the works. The location of the live supplies will be identified to operatives using PTW & Daily Safety Briefings. Live services to be discussed during job briefing prior to work commencing daily with operatives. Roads are to be used and turning circle if suitable. If not suitable then reverse back along road to turning point. Delivery transport is to be always located on agreed roads/route.	3	1	3	Y
Communications	Miscommunication, not understood instruction/work	Unsafe acts, impose working risk to others	TDS Tata	2	2	4	Ensure all communications are clearly understood. Written and visual aids to be used. RAMS/TBT/Plans/SSOW/Permits all to be adhered to and signed to be accepted. Direct contact via radio. Plan works to avoid potential impact. Reiterate daily via briefings. Maintain line of sight and confirm instruction/action by agreed method (hand signals for banksman for example).	2	1	2	Y
Tanks / vessels / equipment / pipes etc	Exposure to hazardous residues, fire, explosion, pollution.	Burns, Liver & kidney failure. Sensitised, respiratory disease. Inflammation of eyes, nose & throat. Asthma. Skin disorders, cancer, death.	TDS Tata Emergency services	3	1	3	Certification issued by Tata to confirm that no substances/ residues remain. All vessels, pipework etc to be emptied and purged prior to work commencing. Visible air gaps where possible. Works to follow a logical sequence as per method statement. PTW to be issued by TDS. Provision of information instruction, training & supervision. Briefing before works commence. POWRA work area assessment approach. Sampling of atmosphere/residue to be undertaken by competent person. Collection trays and storage drums for any remaining product. Follow any permit stipulations about specialist precautionary measures. Works to follow a logical sequence as per method statement. Other live services to be identified as part of induction. Ensure adequate working distance/suitably covered so no contact with heated surfaces. Live cables to be identified / considered if within local working vicinity with localised protection as required. PTW to be issued by TDS. Provision of information instruction, training & supervision.	3	1	3	**Y**
Potential stored energy	Release of energy resulting in flying materials.	Serious injury	TDS	3	1	3	ensure that personnel are clear prior to the cutting sequence commencing and not in line of fire. First line break procedure for access window creation.	3	1	3	**Y**
Small hand tools	Loose hammerheads. Chisels with sharp mushroom heads. Screwdrivers with split handles or damaged/worn blades. Files with loose or missing handles. Blunt cutting tools. Sparks. Tools used for the wrong purpose.	Eye injuries from flying pieces of tool or materials. General cuts and bruises. Hand/arm injuries from damaged tools. Fire if flammable materials present. Musculoskeletal injuries from jarring caused by sudden failure of a tool.	TDS	2	2	4	Monitor wearing of appropriate personal protective equipment. If there is a risk from fire/explosion/electrocution, ensure that a specialist risk assessment is carried out. Monitoring of work activities to include condition checks of tools. If the work is at height, ensure the selection of suitable work platform such as scaffolding or MEWP in preference to steps and ladders. Always wear correct PPE. Hammerheads should be secure and undamaged. Files should never be used without a correctly fitted handle. Sharp edges of tools should be protected when stored or carried and cutting edges should be kept sharp and should be kept clean and clear of grease. Mushroom heads should be removed from chisels by regular grinding. Screwdrivers and chisels should never be used as pry bars. The correct type of tool should be selected for the job. Tools should be returned to the toolbox when not in use. Damaged tools should be disposed of. Hand-tools should be inspected before use. The correct type of glove should be worn unless the wearing of gloves either hinders or causes further hazards. If work is done on or near electrical apparatus, properly insulated and non-conductive tools should be used. If work is carried out near highly flammable materials or explosive dusts, tools made from non-ferrous metals should be used to avoid fire or explosion from sparks.	2	1	2	**Y**

Hand arm vibration	Vibration, noise	Damage to the blood circulation in the fingers (vibration white finger). Pain in the wrists (carpal tunnel syndrome). Pain or loss of sensation in the hands or fingers. Loss of grip strength. Tingling sensations (pins and needles). Loss of manual dexterity. Loss of sense of temperature in the fingers. Hearing loss	TDS	2	2	4	A purchasing/hiring policy that specifying low vibration tools and equipment. Conduct regular health surveillance, including monitoring of vibration exposure. Operatives to complete Medical Self Certification every six months. All Operatives receive the appropriate training and regular toolbox talks on the risks of HAV. Reduce exposure duration by implementing work breaks, job rotation, etc. Ensure that the EAV limit of 2.5m/s2 A(8) is not reached. Ensure that the ELV limit of 5.0m/s2 A(8) is not reached. Avoid or minimise the need to use tools, which expose workers to vibration. Request that the client specify architectural finishes which do not require use of needle guns, scabbling tools, etc. Include hearing protection in PPE risk assessment. Ensure that Operatives controls are complied with. The use of vibration-minimised tools, tool supports - anti-vibration mounts, tensioners, balancers, etc. Use adhesive or welded joints to avoid riveting when & where possible. Look for alternative methods of working - automation, jigs and fixtures to hold the work, etc. Maintain tools and equipment: replace mounts regularly, ensure tools are correctly balanced and keep tools sharp. Design the task to avoid poor posture - avoiding strain on hands and arms. Use appropriate PPE - particularly if used in damp or cold conditions. Change gloves if they become damp or wet, as keeping the hands and arms warm is an important preventive measure. Wear appropriate hearing protection. Staff, operatives & sub-contractors comply with the HAV procedure.	2	1	2	Y
Hot works	Hot metal cutting, spark, prolonged exposure to heat, naked flame, fire, explosion, smoke and oxygen depletion, trip hazards	Burns, explosion, asphyxiation	TDS	3	2	6	Fire & emergency arrangements to comply with Site requirements. Hot works to take place in designated area with man on fire watch. Area to be monitored after work ceases. A thorough re- examination of the hot working area must be made 30 minutes after conclusion of each period of work. TDS PTW. Flint gun control measures/record. Gas stored correctly. Check bottle, hoses and gun for damage. Fittings are correctly attached and free of damage prior to each use. Equipment suitably sited and clear of operations involving heat. Switch off gas after use and at the end of shift, leave bottle keys in. Good ventilation, extraction where required, Emergency Services contacted in case of fire. Dedicated fire extinguishers shall be accessible and placed no more than 10m from the specific the specific work area in compliance with the National Fire Protection Association(NFPA) standards and charged water hoses at the ready. Flint guns to be located within agreed location and issued upon hot work permit acceptance and returned upon hot work permit return. Operating area free of other combustible materials. Hot work operation to cease 1hr before end of shift. Areas to be thoroughly inspected. Check both sides of cut for obstructions. Contain sparks where practicable. Firewatcher in attendance during hot works activities. Correct PPE. Controlled areas of operations. Controlled areas for plant and personnel. Operators supplied with COSHH data. Suitable PPE to be worn at all times. Hoses to be safely stored. Ensure area of operation is free of non essential plant and personnel. When moving ensure area is clear all around. Good traffic management. The provision of heat resistant gauntlets, conforming to EN407. Heat resistant overalls required. Keep out of "Line of Fire" while carrying out activities, stop and assess the works to be done. Trained operatives only to undertake any hot works. Bottles to be fitted with flashback arrestors. Fire watchers, extinguisher and a fully charged fire hose to be in attendance / present at all times. Equipment to be checked daily for visible signs of damage, any faults should be reported, and equipment removed from service. Oxy Propane storage facility must be located in a well-ventilated area and fenced off with appropriate signage. Oxy-propane hoses to be minimum good condition without repairs having the minimum number of joints with appropriately sized connectors with crimp fastenings, not jubilee clips.	3	1	3	Y

-

Housekeeping	Slips, trips and falls. Emergency exits blocked. Access/egress blocked. Build up of flammable materials	Broken bones. Sprains. Bruises. Client complaints	TDS	2	2	4	Regular monitoring of work activities. Housekeeping included within toolbox talk process. Liaison/joint site audits with the client's representative. If work is to take place in an operational area liaise with appropriate staff to minimise operational disruption. When working at height provide scaffolding or other suitable adapted edge protection to prevent tools, equipment, materials falling. Exclude others from work area by signage and barriers. Where other client operations are being undertaken adjacent to the work area the combined effect of your work should be considered. Ensure good lighting in work area. Regularly remove waste materials, debris, etc, throughout the duration of the task. Where possible all flammable materials should be removed from any hot work area. Locate scaffolding, other access equipment, tools and material sensibly. Carefully site trailing leads for tools, etc. Do not generate dust unnecessarily, especially when clearing work site. At the end of the work ensure that all of the equipment, materials, signage, barriers are removed. Do not remove toe boards or edge protection when working at height. Tie tools to lanyards when working at height. Ensure work areas are left in a safe condition at end of each shift.	2	1	2	Y
First aid provision	Movement of plant. Slips, trips & falls. Working at height. Fire. Contact with underground services. Manual handling. Sharp edges. Noise, dust, vibration. Fuel spillage. Hot surfaces. Pedestrian movement. Health hazards.	Sprains, strains, lacerations. Burns. Serious bodily harm.	TDS	2	2	4	All projects must have in place emergency procedures with the names of the first aiders posted on site notice boards along with details of the site emergency procedures, contact details and nearest A&E. The first aid box must be kept well stocked and inspected weekly with the first aid checklist completed to ensure supplies remain adequate. Medicines and home remedies, aspirin, & paracetamol must not be kept in the first aid box. First aiders must not give medicine to anyone. Emergency and first aid provisions to be explained to all site personnel during the site induction. Works to be undertaken as per method statement & risk assessment. Provision of information, instruction, training & supervision. Eye wash stations to be positioned at prominent positions on the project.	2	1	2	Y

Refuelling, inspection, working with and servicing of diesel powered plant & equipment	Spillage of oil or diesel. Injury due to trapping of limbs. When inspection doors or cowling are closed falling from height. Steps and access ways of machinery invariably become slippery due to oil spillage. Manual handling of oil drums and plant components.	Fire and explosions, dermatitis, contamination of the ground or watercourses. Splashes of fuel to the eyes.	TDS Approved supplier	2	2	4	Funnel and air pumps should be used when handling oils or fuels. Care to be taken when opening and closing doors and cowlings. Machine steps and walkways to be kept clean. Use of safety harness to be considered when working at height. Extinguishing medium to be at hand along with absorbent granules should a spillage occur. PPE to be worn i.e. gloves, glasses, safety boots, high visibility clothing etc. Fuel storage tanks should be bunded or be provided with drip trays beneath them to prevent fuels from contaminating the ground and watercourses. COSHH assessment to be available for the substances along with the control measures for its use along with first aid requirements. Use site approved supply contractors. Good personal hygiene to adopted before eating or drinking. Correct disposal of rags or used absorbent granules. Toolbox talks. No naked flames/smoking in vicinity of fuels/greases. Refuelling shall be carried out only in designated areas, if this is not possible care shall be taken to ensure that there are no nearby sources of ignition. Drip trays/plant nappies shall be used to prevent & reduce the environmental impact of spills. Any spillage shall be reported, recorded & cleaned up immediately. All operatives involved in the operation shall wear the appropriate PPE. Plant/machinery drivers shall be trained/competent in how to refuel their vehicle in a safe manner. Spill kits shall be situated at designated refuelling areas & at convenient points throughout site. Fuel containers and bunds shall be stored away from routes with high vehicle activity to reduce the risk of impact and subsequent spillage. If fuels require transportation from the container to the plant or equipment the route should be suitable and sufficient to avoid trips and subsequent spillage. Containers should be placed away from sources of heat and ignition. Disposable gloves shall be made available so that general gloves provided for PPE do not 'soak' up fuel or contaminant. When the container/bund is refuelled by a truck or tanker it should be done so under supervision of a competent operative and guided into and out of site by a traffic marshal. Empty fuel containers shall be removed and disposed of as required. Re-fuelling should be carried out on level ground. The relevant COSHH assessment should be briefed out accordingly. Use the most up to date or new Plant/Machinery/Technology as far as reasonably practicable to reduce emissions. Plant to be suitably maintained and inspected as per PUWER 1998. Ensure exhausts are appropriately positioned to avoid the accumulation of fumes. Ensure exhausts are not directed towards pits, trenches, excavations or other places of work where fumes can muster. Ensure exhausts do NOT become blocked and are properly fitted and maintained. Do NOT handle used exhausts without appropriate PPE. Do NOT eat, drink, and smoke when exposed. Wash hands thoroughly after exposure. Keep plant idling to a minimum, machine turn off when not in use.	2	1	2	Y
Access / egress & control of persons on site	Difficulty enforcing exclusion zones. Obstructions of pedestrian routes / assigned emergency routes. Transport & plant movement. Presence of excavations, pits, voids. Access by third parties. Inadequate lighting. Hazardous substances. Pipes/pits/drains.	Slips & trips. Falls from height or on the same level. Sprains and strains. Fire. Crushed, trapped, struck, serious injury, electrocution.	TDS Tata Delivery transport supplier	3	2	6	Consider emergency escape routes as per Tata / TDS induction. Authorised visitors to be inducted & complete visitors register and be escorted by site management. Exclusion zone around the project to be secure with safety signs placed in prominent positions prior to welfare delivery. Good housekeeping to be maintained with trailing cables protected. Provision should be made for temporary lighting as assessed. Pedestrian route to be clearly segregated from vehicle/plant routes. Vehicle warning systems e.g. amber beacon, horn along with a banksman in attendance. Ensure sign in at control room. Check radio communication between banksman to security/control room. Designated route with entry from main road as defined on the approved route plan and Traffic movement strategy. Ensure persons signed onto permit are aware of site evacuation procedure. Be aware of underground services. PPE to include hi-vis, safety footwear, hard hat, light eye protection and flame retardant clothing. Training & information. Site management to monitor standards of housekeeping. POWRA work area assessment approach. A good standard of housekeeping shall be maintained throughout site. So far as is reasonably practicable uneven floor & ground areas shall be eliminated. All access/egress routes shall always remain clear of obstruction. Adequate lighting shall be provided for access/egress routes in the form of natural light of task specific lighting. Information/safety signage shall be provided. Any loose/protruding items shall be removed or fixed down to prevent any tripping hazards. Differences in walkways, low steps or edging shall be highlighted where required with spray paint/line marker. Gradients in floor levels to be highlighted where it is not possible to level them. PPE footwear to have ankle support, fit correctly and be tied properly and be in good condition with sufficient grip	3	1	3	**Y**
Working near roads & pedestrian areas	Materials falling onto roads or striking vehicles or pedestrians. Operatives being struck by plant or traffic. Noise, dust. Collision with other vehicles. Reversing vehicles.	Serious bodily harm. Crush injury, trapped. Major injury, death.	TDS Tata Delivery transport supplier	3	1	3	Fully fenced work area with exclusion zone. Temporary barriers to be erected where necessary. Banksman to be present. All work to be carried out to the approved method statement and agreed permit. Pedestrians separated from the work and traffic by way of designated pedestrian routes. Communication to be maintained. High visibility jackets to be worn along with the specified PPE. The site manager is to be informed of site activities as appropriate, to arrange closures / restrictions. Defined route plan. A banksman to oversee the works with good communication required to ensure the safety of operatives and pedestrians. Safety signs complying with the site regulations to be placed in prominent positions. Toolbox talks, briefing to be maintained. Segregated working area within tank farm isolated from remainder of site. Notify local Permit Authority of the works so they can re-route where necessary. POWRA work area assessment approach.	3	1	3	**Y**
Storage of hazardous substances, fuel and other materials	Escape / spillage. Contact. Ingestion. Inhalation.	Fire, explosion, Liver & kidney failure, sensitised, respiratory disease, inflammation of eyes, nose & throat. Asthma. Skin disorders, cancer, death.	TDS Approved supplier Delivery transport supplier	2	2	4	Provision and use of PPE & RPE. All storage to be undertaken in accordance with detailed instructions. Storage compound to be secure and all fuel are to be contained within a bunded or approved double skinned tank. Good personal hygiene to be adopted with adequate welfare facilities provided on site. First aid arrangements to be provided on site. COSHH assessments to be undertaken. Suitable in date fire extinguishers to be available adjacent to storage area. Use site approved supplier with correct permits etc. Provision of information, instruction, training & supervision. Toolbox talks. Only authorised personnel to be permitted access to storage area. POWRA work area assessment approach. No smoking within the area. No storage of redundant flammable materials generated from the demolition works, always store in well-ventilated areas and remove as soon as possible. Ensure flammable material stockpiles do not build up.	2	1	2	**Y**

Working outdoors on demolition projects / uneven floors or poor ground conditions / natural light considerations etc	Slips, trips and falls on the same level. Collapse of underground voids or excavations. Access & Egress & poor lighting. Sun / glare, high winds. Cold temperatures. Displacement of tools or materials from height. Reactions of workers much slower. Stress. Slippery conditions.	Sprains & strains, broken bones, cuts and bruising. Being struck by an object from height or falling from height. Slips, trips & falls. Head injury. Sprains & strains. Blisters, sunburn, Skin cancer.	TDS Delivery transport supplier	2	2	4	Good housekeeping to be maintained with pedestrian routes kept clear at all times. Installation and maintenance of good lighting when needed. Provision and use of PPE. Adjacent area levelled and prepared where necessary. Works to cease at height if high winds occur. External works to cease in extreme weather e.g. driving rain, snow, ice, cold, high winds, gritting to be considered. Provision and use of suitable high visibility wet weather clothing. As well as protecting against the possibility of sunburn & the long-term risk of skin cancer, a top will provide protection against minor cuts, abrasions, dusts and some chemicals. Protective creams. Working in colder climate will require additional differing PPE (gloves, jackets etc). Suitable stable delivery transport mechanisms. Maintenance of PPE. Toolbox talks on the effects of relevant condition (being exposed to heat/cold etc). Posters, memo. Supervision. In cold conditions personnel will be advised to wear warm clothing and additional breaks will be put in place if deemed necessary by the area supervisor. To minimise the effects on personnel of hot weather conditions adequate breaks will be provide and a supply of drinking water will be provided at the working area. In heavy rain drivers to ensure windscreens kept clear. Monitor site warning system and adhere to conditions applied to permit etc. Extreme conditions such as high wind/thunderstorm/lightning works are to cease until site clearance given.	2	1	2	**Y**
Eye injury	Corrosive chemicals. Airborne particles and dust from various activities. Dust, sparks, glare, radiation & hot sparks.	High speed flying fragments or particle entering the eye. Eye injury, loss of site (temporary or permanent).	TDS Delivery transport supplier	2	2	4	Light eye protection to BS EN 166-F is mandatory on all projects. When using Abrasive wheels eye protection to BS EN 166-B will be issued and worn. Provision of information, instruction, training & supervision. COSHH assessments to be available plus associated precautions/ treatments/ training. Toolbox talks on the use and care of eye protection. TDS PTW. Delivered welfare to be clean and tidy prior to lifting from Hiab flat bed.	2	1	2	**Y**
Environmental considerations – dust, noise, vibration etc	Potential to release one or all to environment and/or atmosphere Dust – high wind, demolition activity, loading activity Noise – demolition activity, operational plant & equipment Vibration – demolition activity, operational plant & equipment	Inhalation, contact, deafness (temporary or permanent), eye injury, WRULD, whole body vibration	TDS Tata Delivery transport supplier	2	2	4	So far as is reasonably practicable work methods which limit the production of dust shall be implemented. Very short duration works can be planned accordingly. Relative TBT's. Operatives shall be supplied with appropriate eye protection and respiratory protection equipment (RPE). On site routes which will be damped down by water sprays when necessary. Operatives are in receipt of suitable PPE/RPE and health surveillance. TDS will carry out its works such that they do not pollute the environment including nuisance noise, windblown dust, vibration and potential spillages etc. Spill kits will be available on site at suitable locations. Clean up any spillages that may occur immediately. Report any major spillage try to prevent entry into drains. Refer to COSHH Assessment and MSDS info. Spill kits placed adjacent to work area. Refer to NATIONAL GAS handover documentation.	2	1	2	**Y**
Working at Height **Access via man basket** **Access via existing ladders/structures**	Potential to fall from height. Deconfliction of plant/equipment at height. Structural integrity of existing structures.	Serious bodily harm. Major injury, death.	TDS	3	2	6	TDS site management AP to monitor wind conditions to deem if suitable for ongoing operations (crane Anemometers). Harness & lanyard checks to be carried out and recorded. Daily pre-use equipment checks to be carried out and recorded. Chin straps to be worn on hardhats. Any loose tools are to be secured against fall. No personnel are to work directly below the elevated basket and/or suspended loads. Rescue plan to be implemented, briefed and drill carried out. Do not lean or overstretch from man-basket and/or existing access points. Operatives working within the basket are to wear harness + lanyard, clipped on at the designated anchor point within the basket. When working within the basket and over water, operatives are NOT to attach their lanyard. All personnel shall wear a safety harness whilst in the platform or, when the platform is over water a flame-retardant life jacket shall be worn in substitution for the safety harness. TDS Site Management to monitor any open edges or potential to fall, throughout the project. All operations at height will be strictly controlled by TDS Site Management & Supervision. All personnel concerned will undergo a Daily Activity Briefing / Toolbox Talk. Personnel exclusion zones are to be maintained below high-level demolitions areas.	3	1	3	**Y**
Failure of lifting equipment	Potential for dropped loads from height.	Dropped loads leading to serious bodily harm. Major injury, death.	TDS	3	2	6	Ensure crane and other lifting apparatus are suitable and correct for the task. Ensure all relevant test certificates are checked and confirmed suitable for all lifting apparatus. Cranes are to be taken through test sequences to show there are no obstructions and that the plant is operating correctly. All operations controlled by TDS Site Management / Supervisor / AP.	3	1	3	**Y**
Working near or over water	Potential for operatives to fall into water.	Risk of drowning.	TDS	3	2	6	Whilst working over land, operatives working within the man-basket/MEWP are to wear a harness + lanyard, clipped on at the correct anchor point within the basket. When working within the basket and over water, operatives are NOT to attach their lanyard, instead, all personnel shall wear a flame-retardant life jacket. Safety boat to be on standby during all operations where there is a risk of falling into the water. Emergency rescue plans to be implemented and drilled.	3	1	3	**Y**
Stability of cranes	Potential for dropped loads. Potential for overturning.	Serious bodily harm. Major injury, death.	TDS	3	2	6	Ensure cranes being dismantled are anchored in position. Ensure wind speed is continually monitored and will not affect the stability of the lift being carried out. Prior engineering checks to be carried out to demonstrate stability of the unloaders at all stages of partial demolition, calculations show the crane(s) will be maintained in permissible parameters throughout the demolition sequence. Ensure pre-determined sequence of works is followed to ensure COG is maintained throughout the works. Ensure barge stability checks are undertaken and confirmed prior to works commencing.	3	1	3	**Y**

Lifting Operations	Potential for dropped loads. Potential for overturning. Potential for operatives to fall into water.	Serious bodily harm. Major injury, death. Risk of drowning.	TDS	3	2	6	Appointed Person to design all lifts. Appointed Person / Lift Supervisor to control all lifting operations. Inspection of crane driver's certification and crane inspection records. Exclusion zones to be established below high-level operations. Any plant used during removal should be sufficient to complete the task safely / be in serviceable condition and have correct certification. A permit to lift will be signed by all concerned before each lift commences. Detailed (complex) lift plan to be implemented and briefed to all personnel. Certified lifting equipment to be used. Any defects in plant/equipment are to be recorded, the item in question is to be quarantined and suitably labelled not for us. Certified slingers to sling all loads.	3	1	3	**Y**

7. OUTLINE STATEMENT – TDS ON CONTROL OF PROJECTS & HISTORICAL EVIDENCE

TDS have vast experience of crane dismantling and activities in close proximity to open water.

Using our in-house expertise, TDS manage the process from initial feasibility studies, through to final project completion and hand-over.

The following processes form a key part of safe execution on any crane demolition project:

- Implementation of detailed site investigation.
- Engineering studies including:
  - Load Paths.
  - Stability & COG checks.
  - Geotechnical Parameters.
  - Design Lift.
  - Weight calculations.
  - Moment and utilisation checks.
  - 3D Modelling illustrating dismantling sequence.
- Temporary work design(s) and checks.
- Ground stability checks.
- Crane demolition weight take-off and sequence assessments.
- Lift integrity checks.
- Client due diligence and selection of a suitably experienced contractor with a proven track record of dismantling similar cranes.

TDS have been at the forefront of innovation for crane demolition techniques and methodology, which enables a bespoke approach and delivery of the project safely and efficiently.

7.1. COMPLAINTS PROCEDURE

All complaints will be taken seriously and TDS will endeavour to ensure that the Tata Steel Environment Standard Complaints Document (attached hereto in Schedule 1) will be fully adhered to.

7.2. EXAMPLES OF PREVIOUS CRANES DISMANTLED BY TDS

Hunterston Ore & Coal Terminal – 2 no. 2,500 ton unloaders

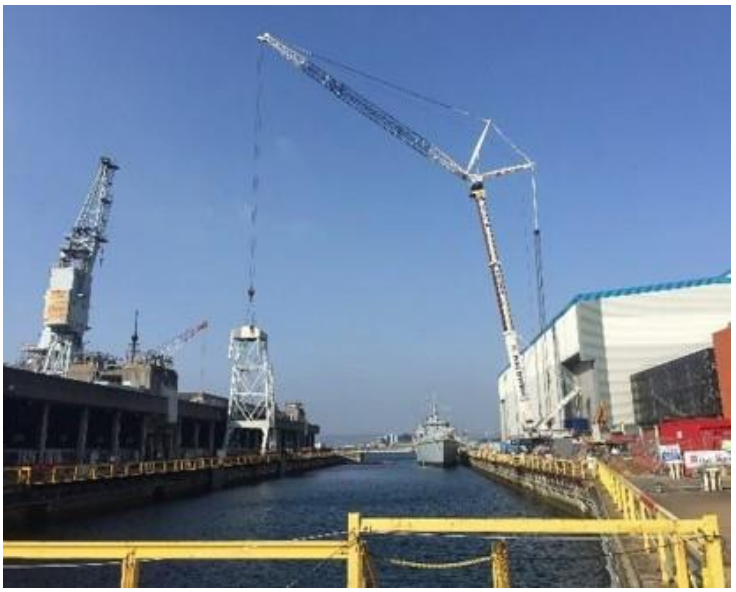

H-332 PANAMA

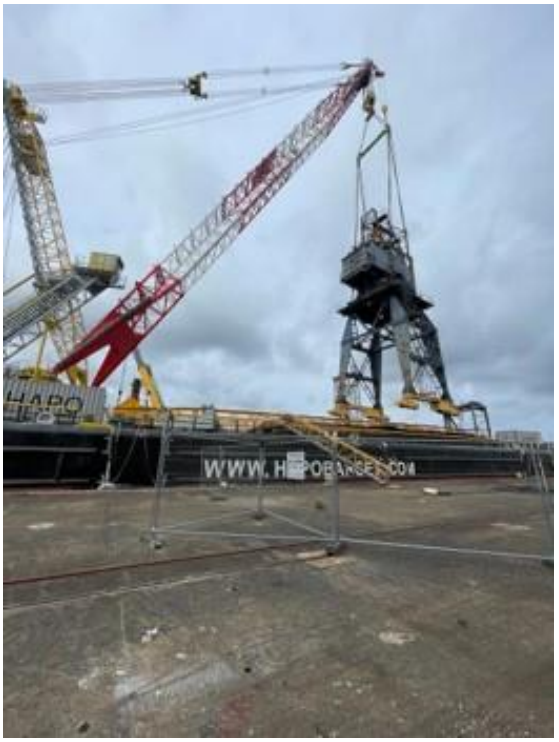

Schedule 1 – Tata Steel Environment Standard Complaints Procedure