S4 TURBO

FIREWOOD BOILER

OPTIONAL WITH
PELLET FLANGE

Awarded the Ecolabel!

A+

PLUS X AWARD
honoured as:
BEST PRODUCT
2015/2016

BETTER HEATING

INNOVATIVE AND
COMFORTABLE

froling

ENVIRONMENTALLY RESPONSIBLE HEATING, ECONOMICALLY ATTRACTIVE

Wood is a domestic and environmentally friendly fuel that grows in large quantities, burns CO_2-neutral and makes it independent of international trouble spots. In addition, numerous jobs are secured through the use of local wood. Therefore, wood is the optimal fuel from both an economic and an ecological point of view. There are different quality classes depending on the wood used.

For almost sixty years Froling has specialised in the efficient use of wood as a source of energy. Today the name Froling stands for modern biomass heating technology. Froling firewood, wood chip and pellet boilers are successfully in operation all over Europe. All of our products are manufactured in our factories in Austria and Germany. Froling's extensive service network ensures that we can handle all enquiries quickly.

GUARANTEED QUALITY AND RELIABILITY FROM AUSTRIA

- International pioneer in technology and design
- Sophisticated fully automatic operation
- Excellent environmental compatibility
- Environmentally responsible energy efficiency
- Renewable and CO_2-neutral fuel
- Ideal for all types of house
- Up to 5 year Froling-waranty (subject to warranty conditions)

S4 Turbo F with pellet flange (optional)

Discover the world of modern log boiler technology! Our new engineers have heard great goals for the S4 Turbo and in reality:

Pellet unit can be added any time

The S4 Turbo F with pellet flange is the ideal solution for people who are currently only burning firewood. It can easily be converted to a dual fuel boiler by fitting the pellet unit at any time (up to 40 kW).

Modular design

The S4 Turbo F has important advantages even before it is put into the boiler room. It is so compact that installing it is child's play even in confined boiler rooms. Due to the modular construction, the S4 Turbo F with pellet flange can be fitted with a pellet unit at any time.

FIREWOOD BOILER S4 TURBO

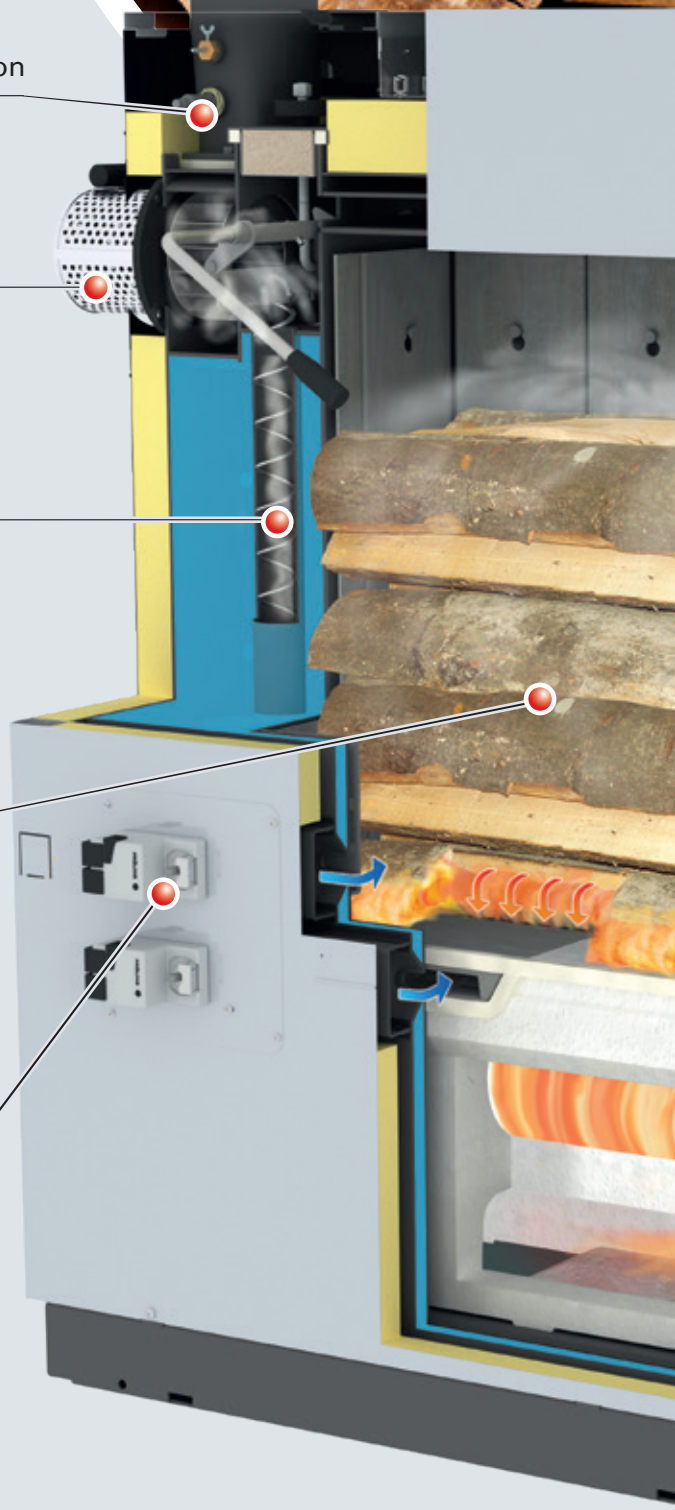

Broadband lambda probe for optimal combustion

Speed-regulated induced draught fan

WOS system Efficiency Optimisation System

Large fuel loading chamber
for logs up to 56 cm in length

Servo-motors as standard for automatic control of primary and secondary air

THE LATEST TECHNOLOGY

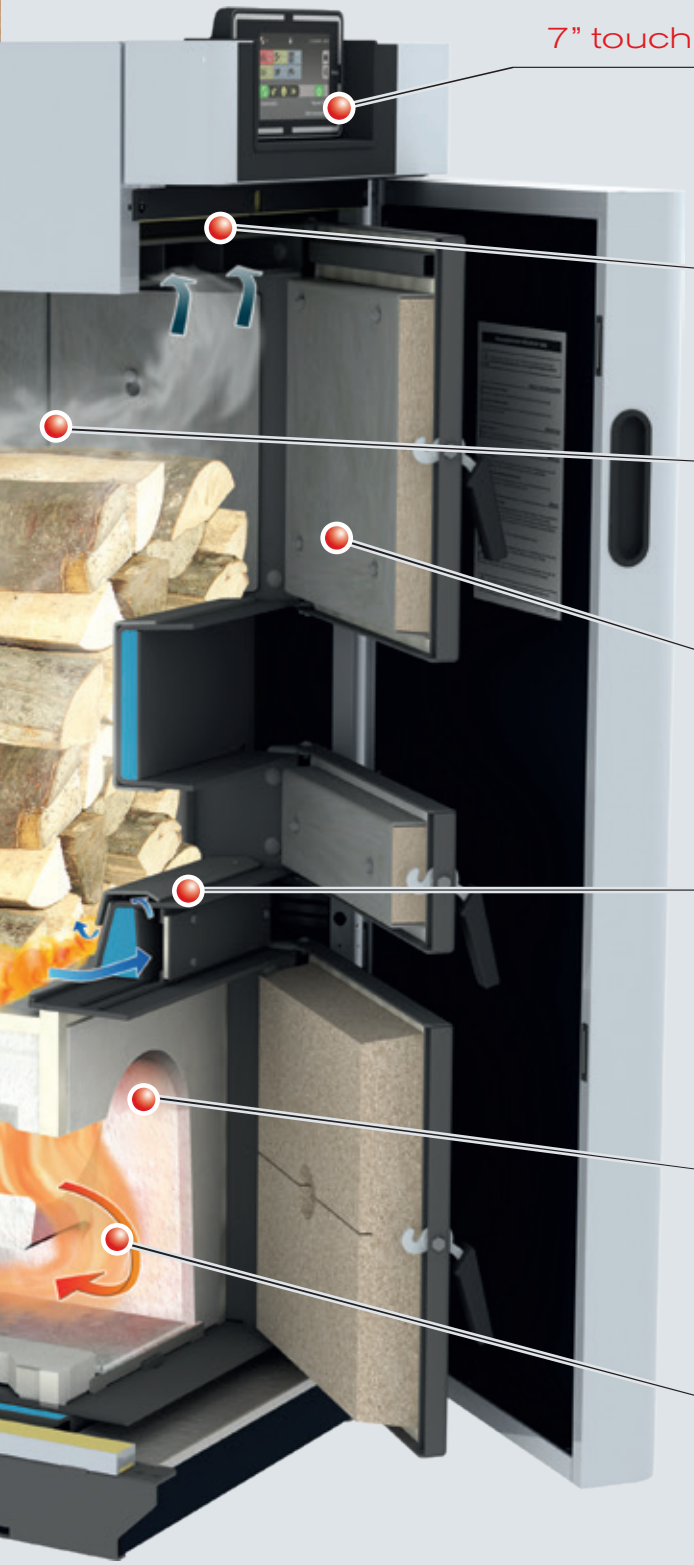

7" touch display for easy and intuitive operation

Carbonisation gas extraction system prevents smoke escaping during reloading

Cladding to protect the inner wall of the boiler and for a longer service life

Large fuel loading chamber doors

Automatic heat up with special air ducts for faster heat up. (optional: automatic ignition device)

Durable silicon combustion chamber

Large maintenance openings for easy cleaning from the front

THE NEXT GENERATION

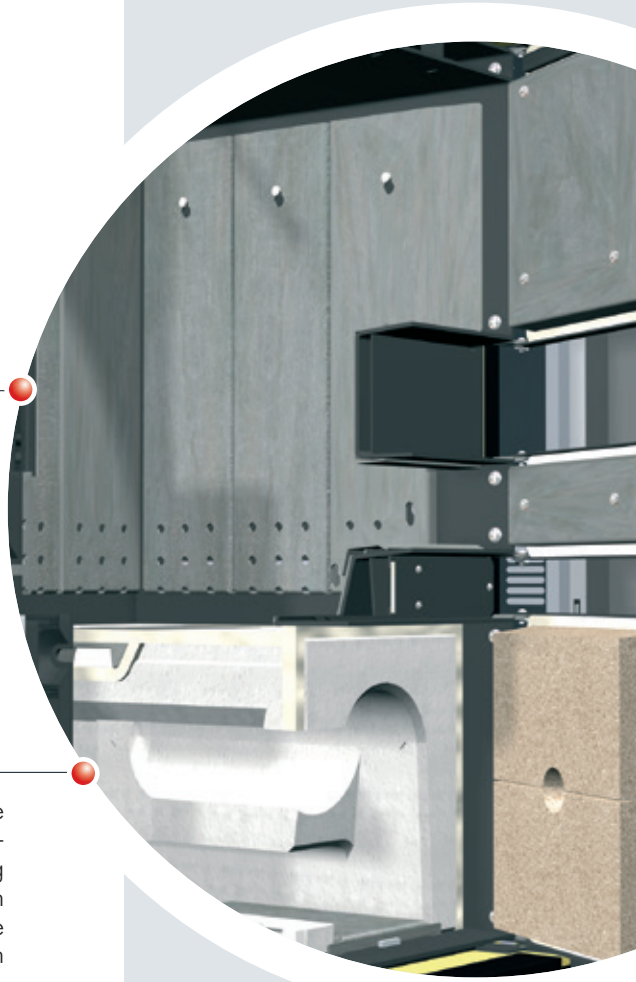

Large fuel loading chamber for halfmetre pieces (up to 56 cm) with hot cladding

The S4 Turbo allows burning of firewood up to a length of 56 cm even from an output of 15 kW. It is filled conveniently from the front of the unit and due to a large fuel loading chamber long refilling intervals are possible. Often it is only necessary to fill the boiler once a day. A cladding, which can be removed easily for cleaning purposes, protects the interior walls of the boiler, guaranteeing a long service life.

Advantages:
- Easy loading
- Long combustion time
- Long reloading intervals

New combustion chamber shape

Froling has refined the traditional cylindrical combustion chamber shape and is setting new standards with an optimised heating gas duct. The exceptionally long combustion zone guarantees very low emissions. By using this firewood boiler technology, you are making a considerable contribution to maintaining clean air in our environment. The robust construction and the use of silicon carbide as a material for the high temperature combustion chamber enable a longer service life.

Advantages:
- Very long combustion zone
- Reduced emissions
- Much more environmentally friendly

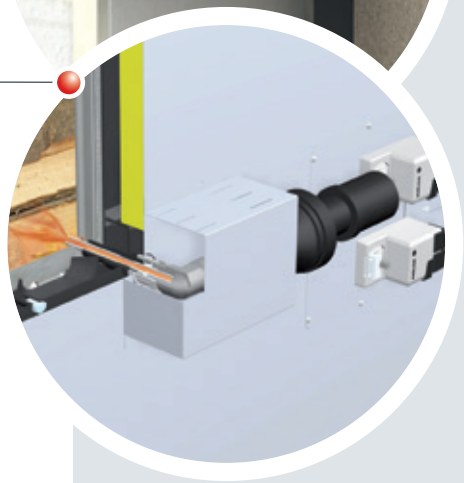

Unique automatic heating-up

A unique design: The ignition door on the S4 Turbo can be closed immediately after ignition due to a special primary air duct. A striking difference to traditional systems. And to make life even easier, you can choose the optional automatic ignition. Heating with firewood can be so convenient!

Advantages:
- Load the boiler, light the fuel, close the door and feel the heat
- No smoke is produced in the boiler room
- Automatic ignition device (optional)

WOS system as standard

We never compromise on convenience. The WOS (Efficiency Optimization System), a standard part of the S4 Turbo, consists of special turbulators which are placed in the heat exchanger pipes. The lever arm mechanism ensures convenient and easy cleaning of the heating surfaces from the outside. An additional benefit of this mechanism is that it ensures higher efficiency and fuel savings.

Advantages:
- Even more efficient
- Easy cleaning from outside
- Fuel economy

Special carbonisation gas extraction system

The specialised carbonisation gas extraction system prevents smoke from escaping even while topping off during refill. This is applicable at every stage of combustion.

Advantages:
- No smoke escapes during reloading
- The boiler room stays clean

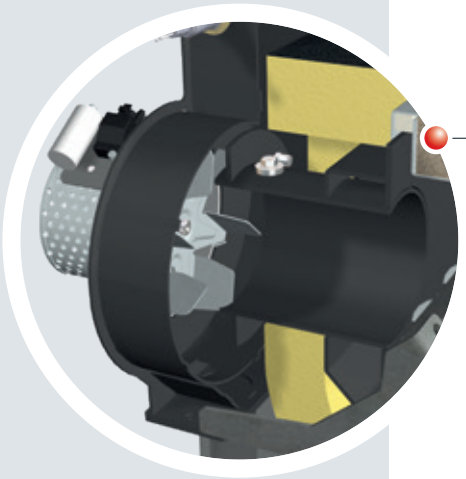

Speed-controlled induced draught fan and lambda control with broadband probe

The speed-regulated induced draught fan is a standard component of the unit, which ensures exact air quantity and constant underpressure throughout combustion. This means that the boiler can be started easily even if the chimney is cold. The speed regulation device in the induced draught fan stabilises combustion throughout the heating process and adjusts the output according to requirements. The induced draught fan also runs very quietly and energy efficiently.

Advantages:
- Maximum ease of use
- Constant stabilisation during combustion

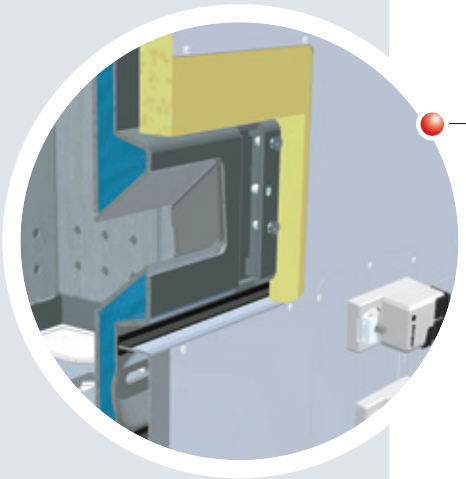

Pellet flange for the S4 Turbo F (optional)

For all those who also want to burn pellets in the future, Froling offers the flexible solution: With the S4 Turbo F 15-40 with pellet flange, the pellet unit can be retrofitted at any time.

Advantages:
- Pellet unit can be retrofitted at any time
- Two systems perfectly combined

INDIVIDUAL CONTROL UNIT OF THE HEATING SYSTEM

Lambdatronic S 3200 control unit

Fröling provides a future-oriented Lambdatronic S 3200 and a new 7“ touch display. Intelligent control management makes it possible to connect up to 18 heating circuits, up to 4 storage tanks and up to 8 hot water storage tanks. The control unit ensures that the operating statuses are clearly shown. The menu structure is ideally organised to allow easy operation. All essential functions can be selected by simply pressing icons on the large colour display.

Advantages:

- Precise combustion control by a Lambda control using a Lambda probe
- Connection for up to 18 heating circuits, 8 water heaters and up to 4 storage tank management systems
- Integration capability for a solar panel system
- LED frame for status display with illuminated presence detection
- Simple and intuitive operation
- Various smart home options (such as Loxone)
- Remote control from the living room (remote control 3200 and RGB 3200 Touch) or via Internet (froeling-connect.com)

SIMPLE & INTUITIVE OPERATION

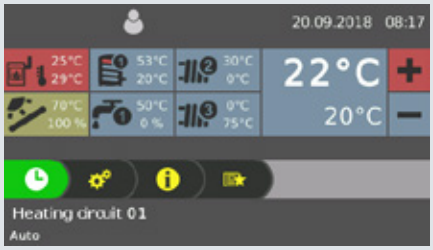

Fig. 1 General overview of the heating circuit (start screen)

Fig. 2 View of the heating times (individually adjustable)

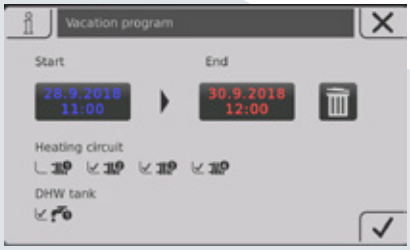

Fig. 3 Overview of the new holiday mode

KEEP TRACK OF EVERYTHING WITH THE FROLING APP

The Froling App allows you to check and control your Froling boiler online from anywhere, at any time. You can read and modify the main status information and settings easily and conveniently online. You can also specify which status messages you want to be informed about via SMS or e-mail (e.g. when the ash box is to be emptied or in the event of a fault message).

Froling boiler (software core module from version V50.04 B05.16) with boiler touch display (from version V60.01 B01.34) a broadband internet connection and a tablet/smartphone with iOS or Android operating system are required. Once the boiler has been connected to the internet and activated, the system can be accessed 24/7 from anywhere using a web-enabled device (mobile, tablet, PC, etc.). The app is available in the Android Play Store and iOS App Store.

- Simple and intuitive operation of the boiler
- Status information can be called up and changed within seconds
- Individual naming of the heating circuits
- Changes of status are notified directly to the user (e.g. via e-mail or push notifications)
- No additional hardware required (such as an Internet gateway)

SMART HOME

Enjoy smart, convenient and piece-of-mind living with the Smart Home connection options from Froling.

Loxone

Combine your Froling heating system with the Loxone Miniserver and the new Froling Extension and implement individual boiler control on the basis of the single room control of the Loxone Smart Home.

Advantages: Easy operation and viewing of the heating circuit via the Loxone Miniserver, immediate notification of status changes and individual operating modes for each situation (presence, holiday, economy mode, etc.)

Modbus

Via the Froling modbus interface, the system can be integrated into a building management system.

RELOAD CALCULATION FOR FIREWOOD

Efficient heating with intelligent reload calculation from Fröling. The current status of the system is visible at all times via the 7" touch display and can be used through simple parameterization of the storage tank type and the storage tank volume.

Taking into account the current storage tank charge, the boiler control calculates the missing energy. When the boiler door is opened, the required amount of fuel for loading the storage tank is displayed in kilogrammes.

Wood types

Different types of wood with the same water content differ mainly in terms of weight. There are lighter (softwood) and heavy (hardwood) types of wood. In relation to weight, all types of wood have an almost identical heating value with the same water content.

In order to achieve the same heating value, more softwood is needed than hardwood. For customers who only have limited storage capacity, hardwood is therefore particularly suitable for heating.

Examples of softwood: spruce, fir, pine, larch, poplar, willow
Examples of hardwood: oak, copper beech, ash, maple, birch, bird cherry

Display for softwood

Display for hardwood

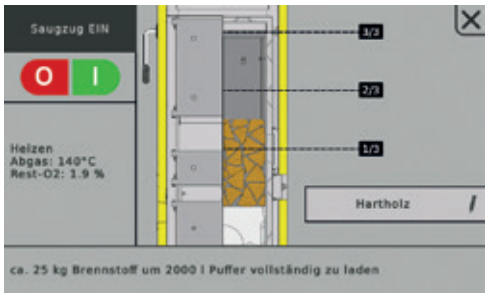

Froling tank systems with sensor strip

Froling layered tanks have a terminal strip for optimal positioning of the sensors. This allows multiple sensors to be positioned at any height and moved without having to empty the tank. The labelling of the sensor strip and corresponding Froling connection diagrams makes the sensors extremely easy to position and offer lots of different options.

To enable an exact calculation of the reload quantities, a total of 4 sensors (positions A, D, G, I) are attached to the terminal strip.

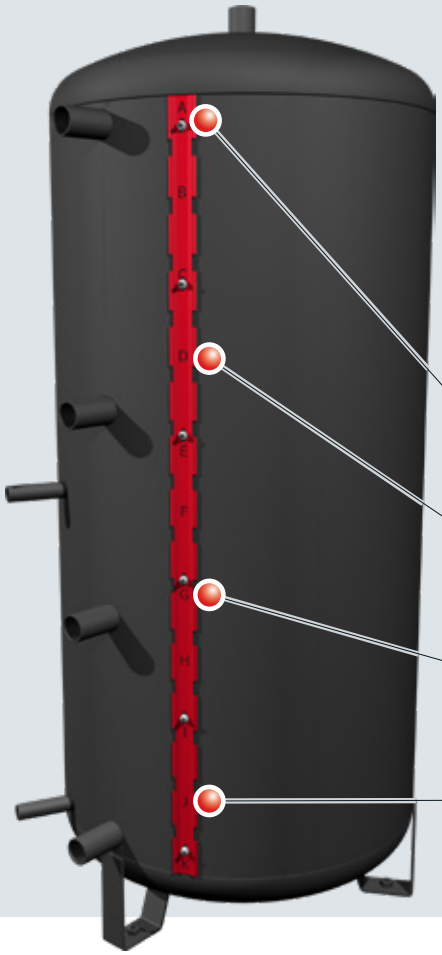

1. Sensor, position A

2. Sensor, position D

3. Sensor, position G

4. Sensor, position I

Correct positioning of the sensors on the terminal strip is crucial for optimal operation of the system!

SYSTEM CONVENIENCE

FRA room temperature sensor

By using the just 8x8 cm FRA room temperature sensor, the main modes of the corresponding heating circuit can be easily selected and adjusted. The FRA can be connected both with and without affecting the store. The adjusting wheel allows you to change the room temperature by up to ± 3°C.

RBG 3200 room console

The RBG 3200 room console makes the system even easier to use. The heating system is conveniently controlled from your living room. All important system data is clearly displayed on the 19x8 cm console and settings can be changed at the push of a button.

RBG 3200 Touch room console

The RBG 3200 Touch has an impressive touchpad interface. The menu structure means it is intuitive and easy to use. The 17x10 cm console with colour screen shows the most important functions at a glance and automatically adjusts the background lighting to the conditions. The room consoles are connected to the boiler controller using a bus cable.

Heating circuit

With wall housing and a contact sensor as heating circuit control for up to two mixer heating circuits.

Hydraulic module

With wall housing and two immersion sensors for controlling one or two pumps and a changeover valve with up to six sensors.

Solarpackage WMZ

Set for heat quantity measurement, consisting of a volume pulse generator ETW-S 2.5 one Collector sensor and two contact sensors for flow and return temperature measurement.

SYSTEMS ENGINEERING FOR OPTIMUM ENERGY CONSUMPTION

Froling systems engineering offers efficient energy management. Up to 4 storage tanks, 8 hot water tanks and 18 heating circuits can help manage the heating. You can also benefit from the ability to integrate other means of energy production such as solar panel systems.

Advantages:
- Complete solutions for all requirements
- Components work perfectly together
- Integrated solar power

S4 Turbo with H3 hygienic tank

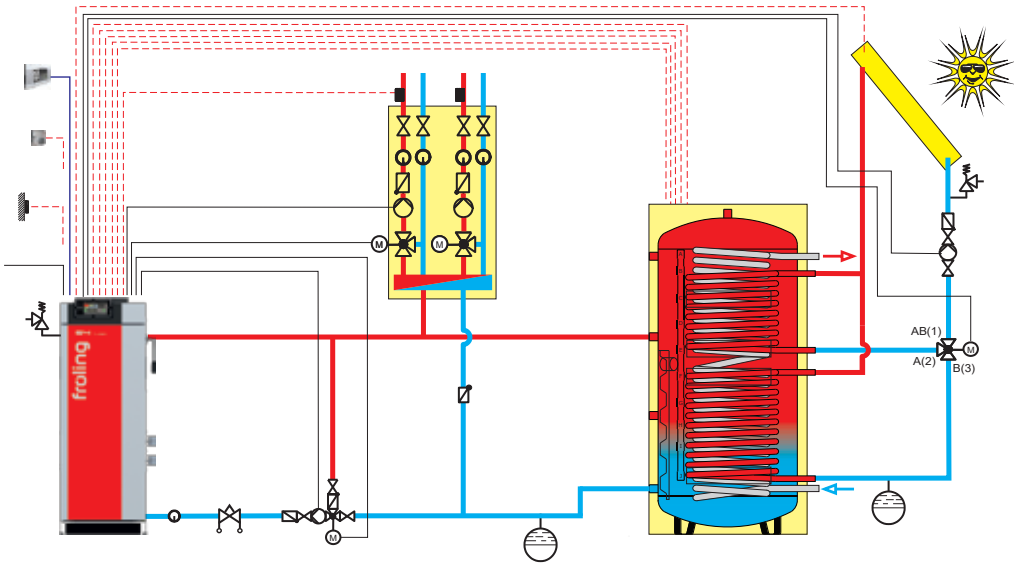

S4 Turbo with oil/gas boiler, layered tank and water heater

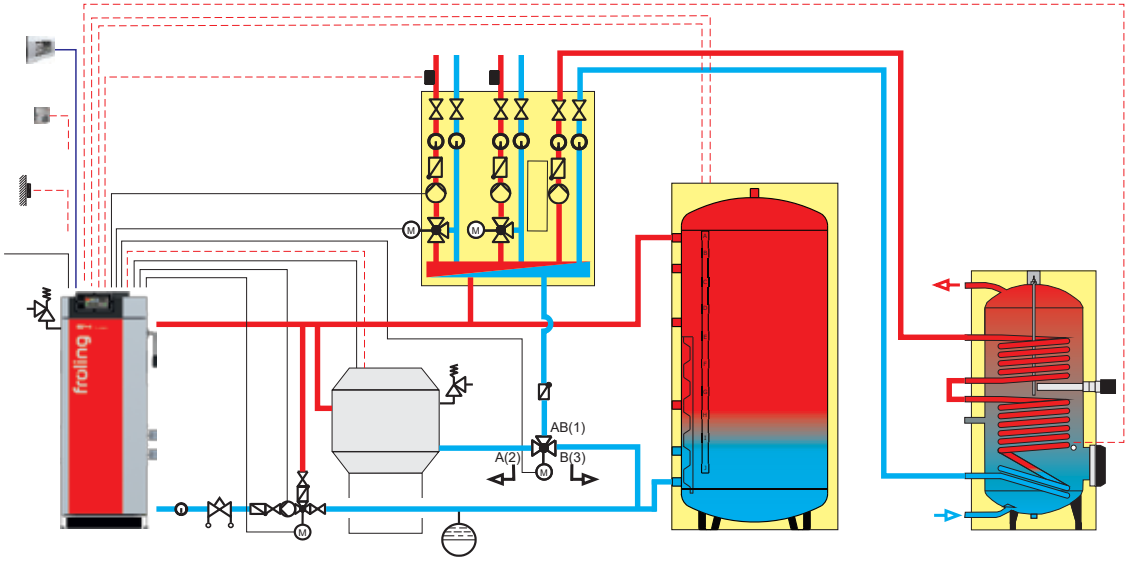

S4 Turbo with layered tank and hot water heat pump

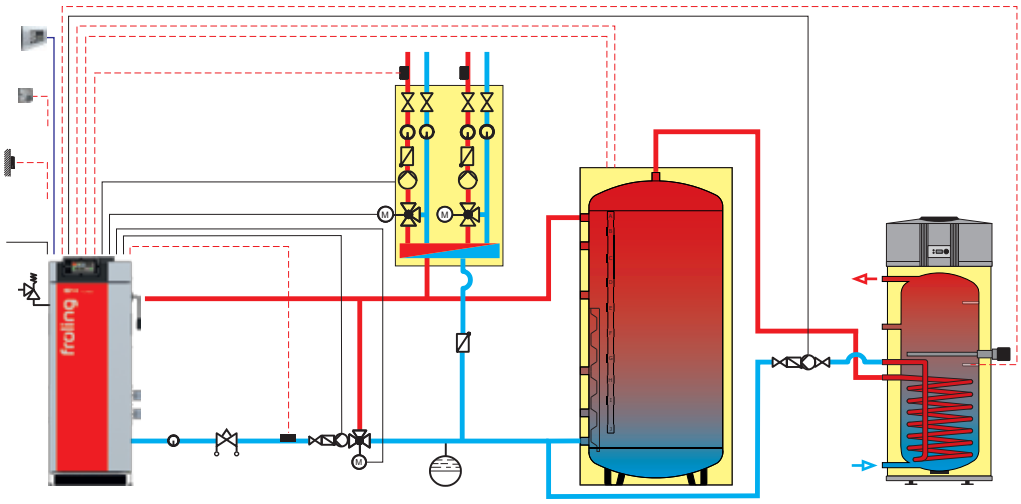

THE PERFECT COMBINATION

Please also see our “Tank systems” brochure.

DIMENSIONS & TECHNICAL SPECIFICATIONS

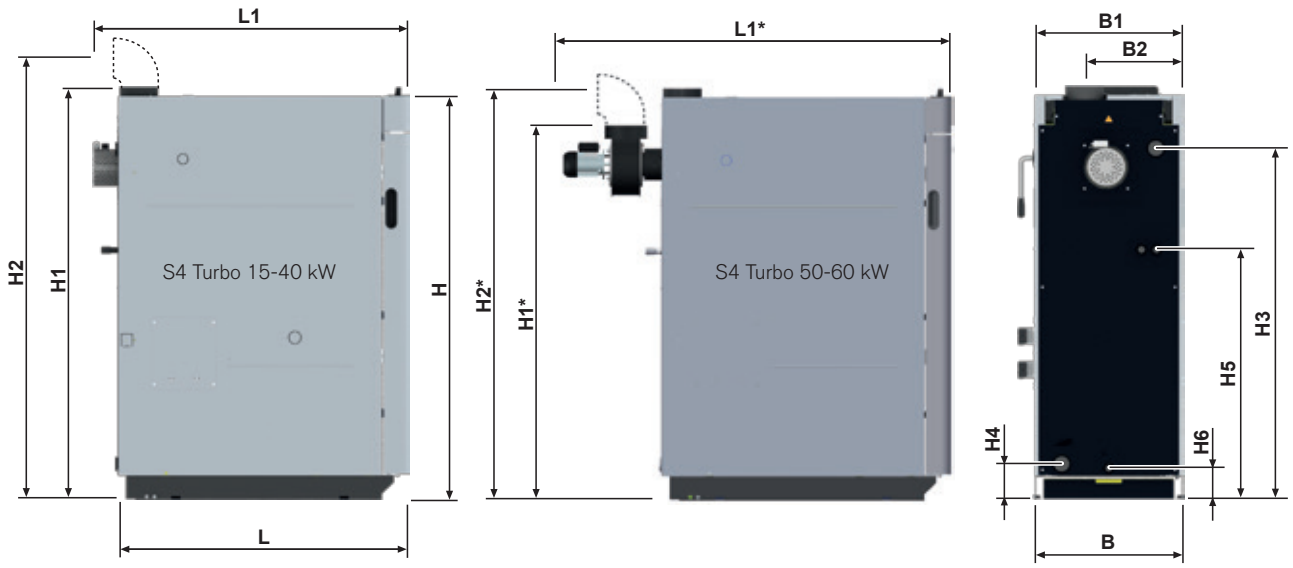

Dimensions - S4 Turbo / S4 Turbo F [mm]		22	28	34	40	50	60
L	Length of boiler	1125		1215			
L1	Total length including induced draught fan / L1[1]	1300		1390		1680	
B	Width of boiler	570		670			
B1	Total width incl. actuators	635		735			
B2	Clearance from flue pipe connection to side of boiler	635		735			
H	Height, boiler	1565					
H1	Total height including flue pipe nozzle / H1*	1610				1480	
H2	Height flue pipe connection[1] / H2*[1]	1715				1585	
H3	Height, flow connection	1360					
H4	Height of return connection	140					
H5	Height, safety heat exchanger connection	970				960	
H6	Height of drainage connection	120					
Flue pipe diameter		149					

[1] When using the optional flue pipe nozzle for low chimney connections

Technical specifications - S4 Turbo / S4 Turbo F*		22	28	34	40	50	60
Nominal heat output	[kW]	22	28	34	40	49,9	60
Energy (ErP) label**		A+	A+	A+	A+	A+	A+
Power consumption	[W]	47	100	55		108	162
Fuel loading chamber capacity	[l]	145		190		200	
Fuel loading door (width/height)	[mm]	380 / 360					
Water capacity	[l]	115		175		200	
Boiler weight	[kg]	645	650	735	745	793	803

* With regards to the approval of drawings for "S4 Turbo xx F" type boilers, the test results on the heating technology requirements of the "S4 Turbo xx" wood chip boiler according to EN 303-5 can be used.
** Composite label (boiler + controls)

The ecodesign requirements according to VO (EU) 2015/1189, Annex II, point 1. are met.

OPERATING AND MAINTENANCE AREAS

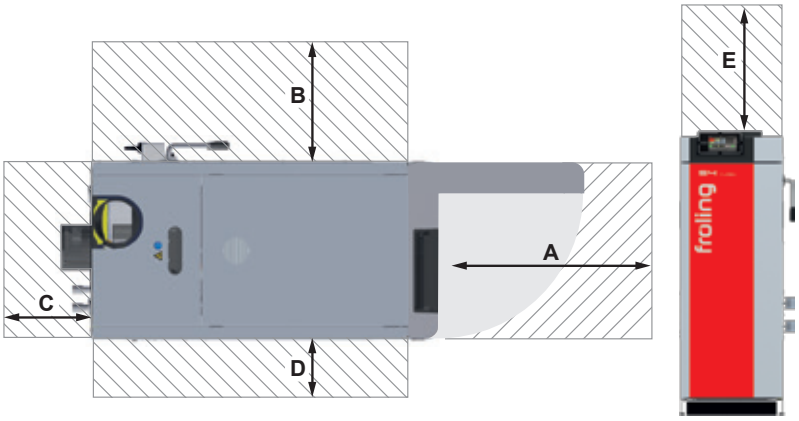

Minimum distances - S4 Turbo [mm]		
A	Distance – front of boiler to wall	800
B	Distance between side of boiler and wall*	800 (200)
C	Distance - back to wall of S4 Turbo 15-40 Distance - back to wall of S4 Turbo 50-60	500 800
D	Distance between side of boiler and wall*	200 (800)
E	Maintenance area to expand the WOS springs upwards**	500

* When using the WOS lever on the left-hand side
** Maintenance area to expand the WOS springs upwards

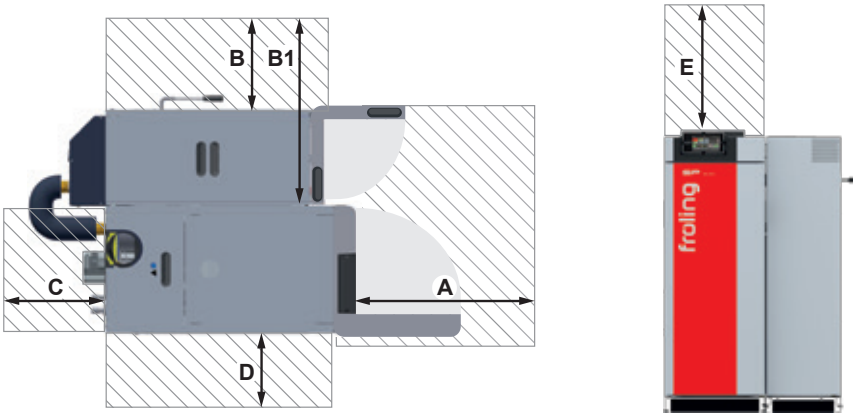

Minimum distances - S4 Turbo F / SP Dual [mm]		22-40
A	Distance - insulated door to wall	800
B	Distance – boiler side with heat exchanger lever and pellet unit to wall[1]	600 (300)
B1	Distance – boiler side without pellet unit to wall[1]	1030 (730)
C	Distance – back to wall	500
D	Distance between side of boiler and wall[2]	200 (800)
E	Maintenance area to expand the WOS springs upwards[3]	500

[1] When using the optional WOS drive or WOS lever on the left-hand side
[2] When using the WOS lever on the left-hand side
[3] Maintenance area to expand the WOS springs upwards

Pellet boiler

PE1 Pellet	7 - 35 kW
PE1c Pellet	16 - 22 kW
P4 Pellet	48 - 105 kW

Firewood boiler

S1 Turbo	15 - 20 kW
S3 Turbo	20 - 45 kW
S4 Turbo	22 - 60 kW

Dual fuel boiler

SP Dual compact	15 - 20 kW
SP Dual	22 - 40 kW

Wood chip / Large boilers

T4e	20 - 350 kW
Turbomat	150 - 550 kW

TI	350 kW
Lambdamat	750 - 1500 kW

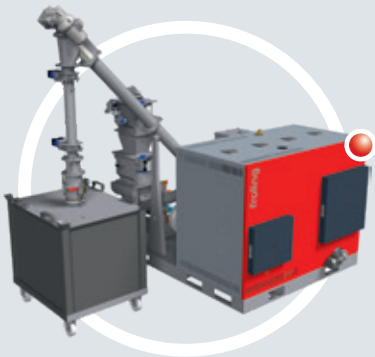

Wood combined heat and power

Fixed-bed gasifier CHP	45 - 500 kWel

Your Froling partner

Fröling Heizkessel- und Behälterbau Ges.m.b.H.
A-4710 Grieskirchen, Industriestr. 12

AT: Tel +43 (0) 7248 606-0
Fax +43 (0) 7248 606-600

DE: Tel +49 (0) 89 927 926-0
Fax +49 (0) 89 927 926-219

E-mail: info@froeling.com
Web: www.froeling.com

P0181320 - All illustrations intended as a guide only! We reserve the right to make technical changes without prior notice. Errors and omissions excepted.

froling